MINIMUM STANDARD 3.01

EARTHEN EMBANKMENT

View BMP Images

LIST OF ILLUSTRATIONS

#	FIGURES	PAGE
3.01-1	Embankment Cross-Sections:	
	a) Homogenous Embankments w/ Seepage Controls	3.01-3
	b) Zoned Embankment	3.01-4
3.01-2	Profile Along Centerline of Embankment	3.01-11
3.01-3	Profile Along Centerline of Pincipal Spillway	3.01-14

#	TABLES	PAGE
3.01-1	Embankment Top Widths	3.01-12

MINIMUM STANDARD 3.01

EARTHEN EMBANKMENT

Definition

An earthen embankment is a raised impounding structure made from compacted soil.

Purpose

The purpose of an earthen embankment is to impound stormwater runoff.

Conditions Where Practice Applies

An earthen embankment is appropriate for use with infiltration, detention, extended-detention or retention facilities.

The design procedures presented in this section **may not** apply to small embankments or to storm drainage outfall structures with less than 3 feet of embankment height. The review and approval of such structures should be based on sound engineering practices and supporting calculations that verify a stable outfall for the 10-year storm, at a minimum.

Similarly, this section **does not** apply to embankments with a height of 25 feet or more and a maximum storage capacity of 50 acre-feet or more, as measured from the top of the embankment. Such structures may be regulated under the Virginia Dam Safety Act and the Virginia Dam Safety Regulations (VR 625-01-00).

The *height of an earthen embankment* is the vertical distance from the natural bed of the stream or watercourse, measured at the downstream toe of the embankment, to the top of the embankment. If the embankment does not span a stream or watercourse, the height is the vertical distance between the lowest elevation, measured at the outside limit of the embankment, and the top of the embankment.

Planning Considerations

Earthen embankments are complex structures that must be designed and constructed with consideration given to the following: a) *specific site and foundation conditions*, b) *construction material characteristics*, c) *purpose of the impoundment*, and d) *hazard potential associated with the particular site and/or impoundment*.

The *hazard potential* associated with an impoundment is defined in the Virginia Dam Safety Regulations. It is based on the potential for loss of life and/or economic loss due to facility failure. While stormwater management embankments are typically much smaller than those regulated under the Virginia Dam Safety Program, the potential for significant property damage and loss of life may still be present. The engineer is responsible for analyzing potential downstream impacts and for determining if more stringent analyses are required. **Minimum** guidelines for those facilities **not covered** under Virginia's Dam Safety Regulations are provided in this handbook.

Embankment Types

The type of embankment selected will depend on the purpose of the stormwater facility (detention, extended-detention, retention, etc.) and the available soil material for construction. The two general types are listed below:

1. A *homogeneous embankment* is composed of one kind of material (excluding slope protection). The material used must be sufficiently impervious to provide an adequate water barrier, and the slopes must be moderately flat for stability and ease of maintenance (see **Figure 3.01-1a**).

2. A *zoned embankment* contains a central impervious core, flanked by zones of more pervious material, called shells. These pervious zones or shells enclose, support, and protect the impervious core. Typically, a zoned embankment requires an internal drain, or filter, between the impervious zone and the downstream shell and between the shell and the foundation (see **Figure 3.01-1b**.

Soils Investigation

A soils investigation, or geotechnical study, should be completed before designing any earthen embankment covered in this section. The scope of such a study will vary from site to site based upon the size of each project. Recommended minimum guidelines for a geotechnical study are provided below. Refer to U.S. Department of Interior (USDI), Design of Small Dams, latest edition, for additional information.

FIGURE 3.01 - 1a
Homogeneous Embankments w/ Seepage Controls

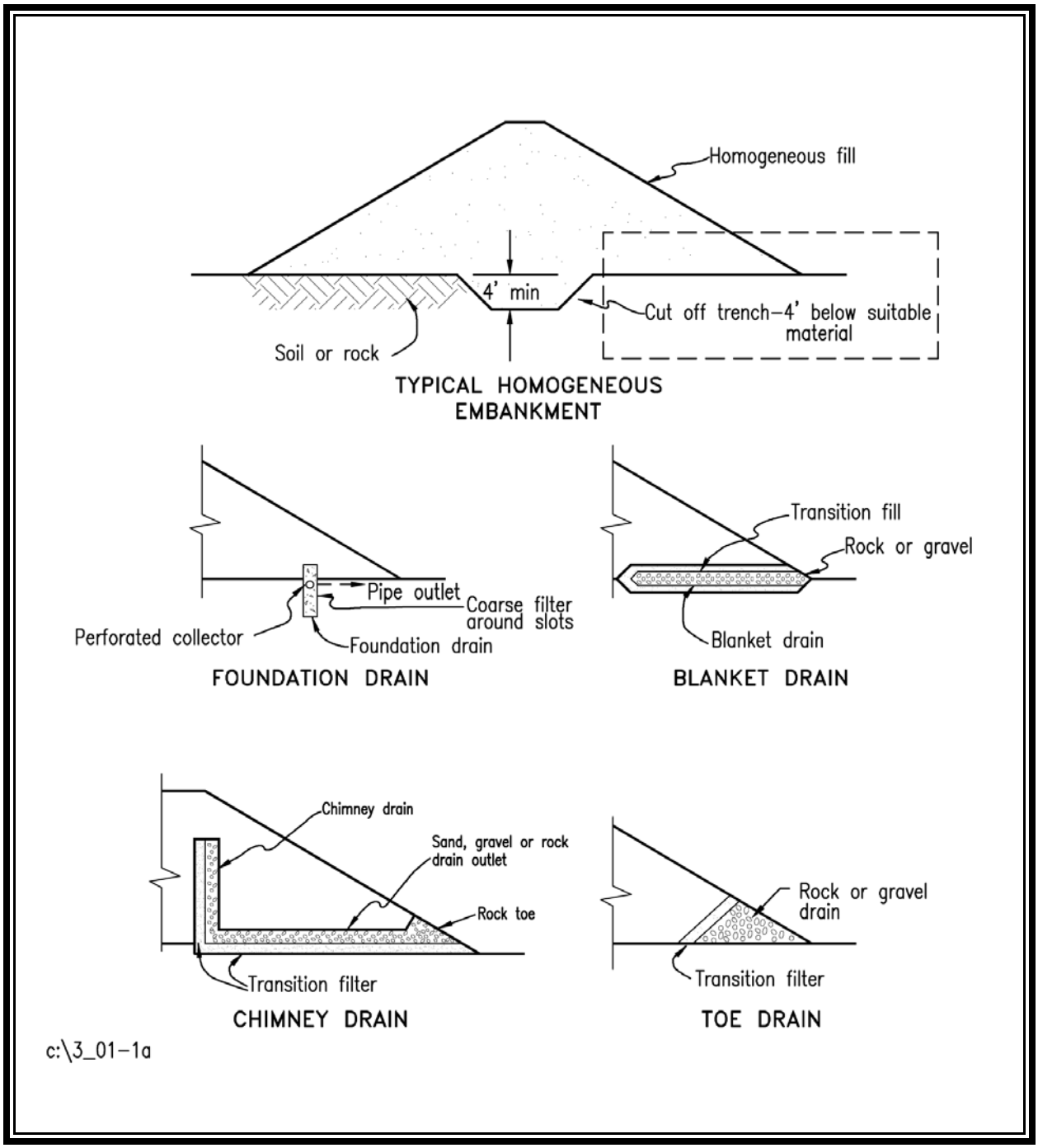

Source: SCS Engineering Field Manual

FIGURE 3.01 - 1b
Zoned Embankment

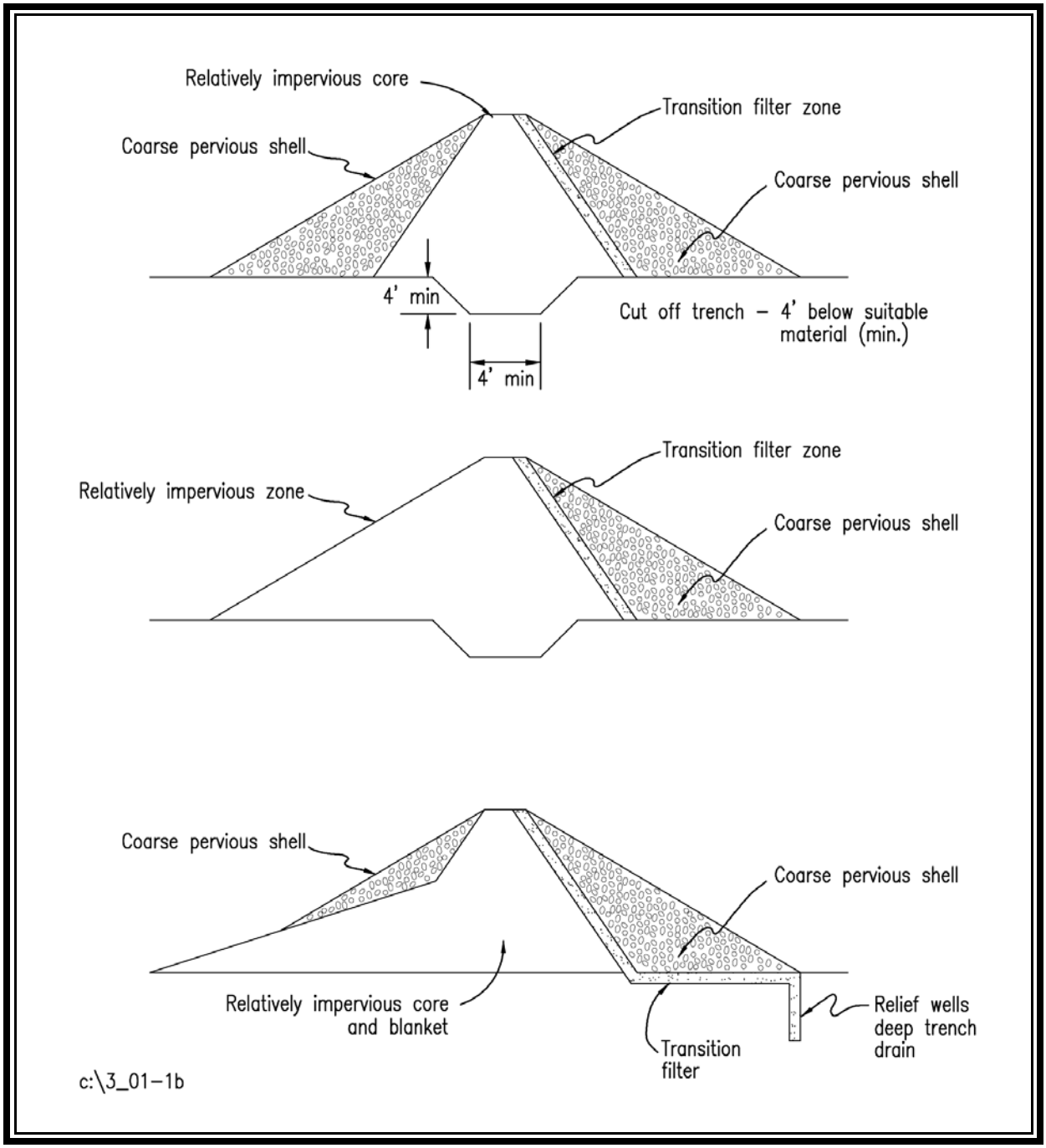

Geotechnical Guidelines

The following discussion presents minimum recommended criteria for the planning and design of earthen embankments. The designer is responsible for determining which of the guidelines are applicable to the specific project and for determining if any additional investigations are required.

The validity of the design depends on the thoroughness of the site investigation, the adequacy of the testing program, and the soundness of the designer's judgment. Design components based on quantitative soil tests, such as analyses of slope stability, seepage, and settlement, are not discussed herein, but they are necessary to design large dams. Such analyses will logically follow the selection of a preliminary design. Even for small earth dams that have a low hazard potential, the following criteria should be considered in a geotechnical report.

A geotechnical engineering study should evaluate the stability of the proposed embankment.

A geotechnical engineering study should consist of 1) *a site investigation*, 2) *laboratory testing*, and 3) *an engineering analysis*.

1. A field investigation should include the review of available soils information and a subsurface exploration. Test borings, test pits, or both, should be used to evaluate the foundations, abutments, borrow materials, reservoir area, embankment design and any other pertinent geological considerations. In areas underlain by Karst limestone, a subsurface profile using seismic or sonar technology should be considered to verify that subsurface anomalies do not exist. This type of subsurface investigation may also be recommended in areas known to have been previously mined for mineral extractions.

2. Laboratory testing should be completed to evaluate the various soils. At a minimum, an *index property test* should be completed to classify the soils following the Unified Soil Classification System. Shear strength, compressibility, and permeability testing may be required depending upon the size and complexity of the embankment and the nature of the site's subsurface conditions.

3. A geotechnical engineer should do an engineering analysis and present his or her findings, recommendations and comments on items such as: foundation materials and preparation; design of interior drainage features and filters; and geotechnical design of conduits/structures through the embankment, including seepage and stability analyses. The engineer should also provide a summary describing the soil types and rock strata encountered and explaining the laboratory tests and their results.

Stream Diversions

The design of some earthen embankments will require provisions for stream diversions around or through the embankment site during construction. A stream diversion can be accomplished by a variety of acceptable means, including open channels, conduits, coffer dams, and pumping. Occasionally, stream diversions may be required to meet additional requirements and/or to be permitted by agencies such as the U.S. Army Corps of Engineers, the Virginia Department of Environmental Quality, and/or the Virginia Marine Resources Commission. Refer to the Virginia Erosion and Sediment Control Handbook (VESCH), 1992 edition, for additional guidance on stream diversions.

Design Criteria

To establish *design water surface elevations* and *spillway capacity* for earthen embankments, various hydrologic design methods and spillway storm frequencies may be used. Factors that affect their selection include: a) *the purpose of the stormwater facility: flood control, water quality enhancement*, *and/or channel erosion control,* b) *the contributing watershed size*, and c) *local regulations*. Despite the design method selected or the frequency storm is used, **the embankment should always be analyzed to ensure safe passage of the maximum spillway design storm while maintaining its structural integrity and stability**. Furthermore, the embankment height should be set such that runoff from the spillway design storm can safely pass through one of the following spillways without overtopping the embankment:

- a natural or constructed spillway,
- a principal spillway, or
- a combination of a principal spillway and an emergency spillway.

Hydrologic and hydraulic methods are described in **Chapters 4** and **5**, respectively.

Local ordinances or watershed conditions may require a more stringent analysis of the embankment concerning overtopping or spillway capacity. The Soil Conservation Service's (SCS) National Engineering Handbook and the Virginia Dam Safety Regulations provide a classification of dams based on the *potential hazard* from failure. A dam failure analysis, or *breach analysis*, may be required to learn the extent of the potential hazard. Any dam breach analysis should use a method similar to the Army Corps of Engineers, SCS (TR-60), National Weather Service, or that specified by the local authority.

Embankment Stability

An earthen embankment must be designed to be stable against any *force condition* or combination of *force conditions* that may develop during the life of the structure. Other than overtopping caused by inadequate spillway capacity, the three most critical conditions that may cause failure of the embankment are:

1. *Differential settlement* within the embankment or its foundation due to a variation in materials, a variation in embankment height, or compression of the foundation strata. Differential settlement may, subsequently, cause the formation of cracks through the embankment that are roughly parallel to the abutments. These cracks may concentrate seepage through the dam and lead to failure by internal erosion.

2. S*eepage* through the embankment and foundation. This condition may cause piping within the embankment or the foundation, or both.

3. S*hearing stresses* within the embankment and foundation due to the weight of the fill. If the shearing stress force exceeds the strength of the materials, sliding of the embankment or its foundation may occur, resulting in the displacement of large portions of the embankment.

The stability of an embankment and its side slopes is dependent on the following: 1) *construction materials*, 2) *foundation conditions*, 3) *embankment height and cross-section geometry*, 4) *normal and maximum pool levels*, and 5) *purpose of BMP: retention, detention, or extended-detention*. The embankment cross-section should be designed to provide an adequate factor of safety to protect against sliding, sloughing, or rotation in the embankment or foundation. SCS's TR-60 publication provides guidelines for slope stability analysis when required. The most important factors in determining the stability of an embankment are:

1. **Physical characteristics of the fill materials**. Soil classification for engineering uses can be found in the SCS Engineering Field Manual, Chapter 4, and other references listed at the end of this section.

2. **Configuration of the site**. The height of the embankment may vary considerably throughout its length, so the total settlement of any given section of the embankment may differ from that of adjacent sections. The length of the embankment and slope of the abutments profoundly influence the degree of differential settlement between adjacent sections of the embankment. As the length shortens and the abutments become more steep, differential settlement becomes more likely. (**Minimum Standard 3.02**, **Principal Spillway** discusses the use of a concrete cradle to protect the spillway barrel sections from separating due to the forces of differential settlement.)

3. **Foundation materials**. The character and distribution of the foundation material must be considered for its *shear strength*, *compressibility*, and *permeability*. Occasionally, the shear strength of the foundation may govern the choice of embankment slopes. Permeability and stratification of the foundation may dictate the need for a *zoned embankment*. Quite often, foundations contain compressible soils that settle under the weight of the embankment, although the shear strength of these soils is satisfactory. When such settlement occurs in the foundation, the embankment settles. This settlement is rarely uniform over the basal area of the embankment. Therefore, fill materials used on such sites must be sufficiently plastic to deform without cracking. (**Minimum Standard 3.02**, **Principal Spillway** discusses the use of a concrete cradle to protect the spillway barrel sections from separating due to the forces of differential settlement.)

A foundation composed of homogeneous soil is simple to evaluate; however, this condition rarely occurs in natural soil deposits. Most often, a stratified deposit composed of layers of several soil types is encountered. To determine the suitability of such a foundation, the following information becomes very important: 1) *the geologic history of the site*, 2) *the degree of stratification*, and 3) *the order in which materials occur within the stratification*. A complex, stratified foundation containing plastic or compressible soil should be investigated by an experienced engineer or geologist.

Foundation cutoff - A foundation cutoff trench of moderately impervious material should be provided under the embankment. The cutoff trench should be installed at or upstream of the dam's centerline, and should extend up the abutments to the 10-year water surface elevation.

The bottom of the cutoff trench should be wide enough to accommodate excavation, backfill and compaction equipment. The trench's minimum width and depth should be 4 feet and the side slopes should be no steeper than 1H:1V (refer to **Figures 3.01-1a,b** and **3.01-2**).

Rock foundations - The presence of rock in the embankment foundation area requires specific design and construction recommendations (provided in the geotechnical engineering analysis) to insure a proper bond between the foundation and the embankment.

Generally, no blasting should be permitted within 100 feet of the foundation and abutment area. If blasting is essential, it should be carried out under controlled conditions to reduce adverse effects on the rock foundation, such as over-blasting and opening fractures. This is especially critical in areas of Karst topography.

Embankment zoning and seepage - The stability of an embankment slope and the seepage pattern through it are greatly influenced by the *zoning of the embankment*. (Refer to **Embankment Types** in the **Planning Considerations** section of this standard.) The position of the saturation line within a homogeneous embankment is theoretically independent of the type of soil used in it. Although soils vary greatly in regard to permeability, even the tightest clays are porous and cannot prevent

water from seeping through them. **The rate of seepage through an embankment is dependent on the consistency of the reservoir level and the permeability of the embankment or core material**.

The upper surface of seepage is called the *phreatic surface* (zero pressure). In a cross-section, it is called the *phreatic line*. The position of the phreatic line in a retention basin embankment can be assumed to begin at the normal pool elevation on the upstream slope and extend at a 4H:1V slope downward through the embankment. **This assumption is based on the presence of a permanent pool**. For detention and extended-detention facilities with no permanent pool, many designers assume that the embankment will not impound water long enough for a phreatic surface to occur. This assumption, however, is based on a properly designed, constructed, and maintained embankment. Many jurisdictions, therefore, have chosen a conservative design approach by requiring that the phreatic line start at the 10-year design storm water surface elevation, regardless of the presence of a permanent pool.

For most stormwater management facilities, determining the location of the phreatic surface will often suggest the need to install seepage collars on the barrel. (Refer to **Minimum Standard 3.02, Principal Spillway**, for a discussion on seepage control along conduits.) For larger stormwater facilities, especially those with a permanent pool, the location of the phreatic surface may require additional design considerations such as an internal drain.

If the saturation line intersects the downstream slope of the embankment at a point above the toe, then seepage will exit the embankment along the downstream face and toe. Typically, the quantity of seepage is so slight that it does not affect the slope's stability. However, sometimes the saturation of the toe will cause sloughing or serious reduction of the shear strength in the downstream section of the embankment. Seepage control should be included in the design if the following conditions exist:

- pervious layers in the foundation are not intercepted by the cutoff,
- possible seepage from the abutments may create a wet embankment,
- the phreatic line intersects the downstream slope, or
- special conditions exist which require drainage to insure a stable embankment.

For *seepage collar design*, it is recommended that the phreatic line start at the 10-year design storm water surface elevation and extend through the embankment at a 4H:1V slope. **If the phreatic line intersects the downstream slope, a qualified soil scientist should be consulted to decide if additional controls are needed**. The location of the phreatic surface, therefore, may have a significant impact on the design of the embankment.

Seepage may be controlled by:

- foundation, abutment or embankment drains,

- a downstream drainage blanket,
- a downstream toe drain, or
- a combination of these measures (see **Figure 3.01-1b**).

Seepage encountered in the cutoff trench during construction may be controlled by *foundation drains*. These drains must be downstream of the embankment centerline and outside the limits of the proposed cutoff trench.

Including a toe drain in the design of most homogeneous embankments may be desirable. Embankments built on pervious foundations or constructed of materials that exhibit susceptibility to piping and cracking should always be protected by adequate toe drainage. Toe drains may be constructed of sand, gravel, or rock, depending on the nature of the embankment fill material. Whenever a rock toe drain is installed, a graded filter should be placed between the fill and the drain. Often, a 12-inch layer of well-graded, stream-run, sandy gravel will satisfy this requirement. Filter and drainage diaphragm design criteria are presented in the references listed as USDA-SCS Soil Mechanics Notes No. 1 and No. 3 at the end of this section, and provided in **Chapter 5 Appendix 5B**.

Piping

The contact areas between the embankment soils, foundation material, abutments, and conduits are the most susceptible locations for *piping failures.* Piping occurs due to the variation in materials at contact points and the difficulty in compacting the soil in these areas. Compaction is especially difficult next to and under conduits and seepage collars. Therefore, it is highly recommended that all utility conduits, except the principal spillway, be installed away from the embankment. When utility conduits through the embankment cannot be avoided, they should meet the requirements for spillways, i.e., water tight joints, no gravel bedding, restrained to prevent joint separation due to settlement, etc.

Seepage along pipe conduits that extend through an embankment should be controlled by use of the following:

- anti-seep collars, or
- filter and drainage diaphragms.

Refer to **Minimum Standard 3.02, Principal Spillway** for additional information on the use of anti-seep collars. Filter and drainage diaphragms are presented in USDA-SCS Soil Mechanics Notes No. 1 and No. 3, available upon request from DCR or USDA-SCS. When filter and drainage diaphragms are used, their design and construction should be supervised by a registered professional engineer.

FIGURE 3.01 - 2
Profile Along Centerline of Embankment

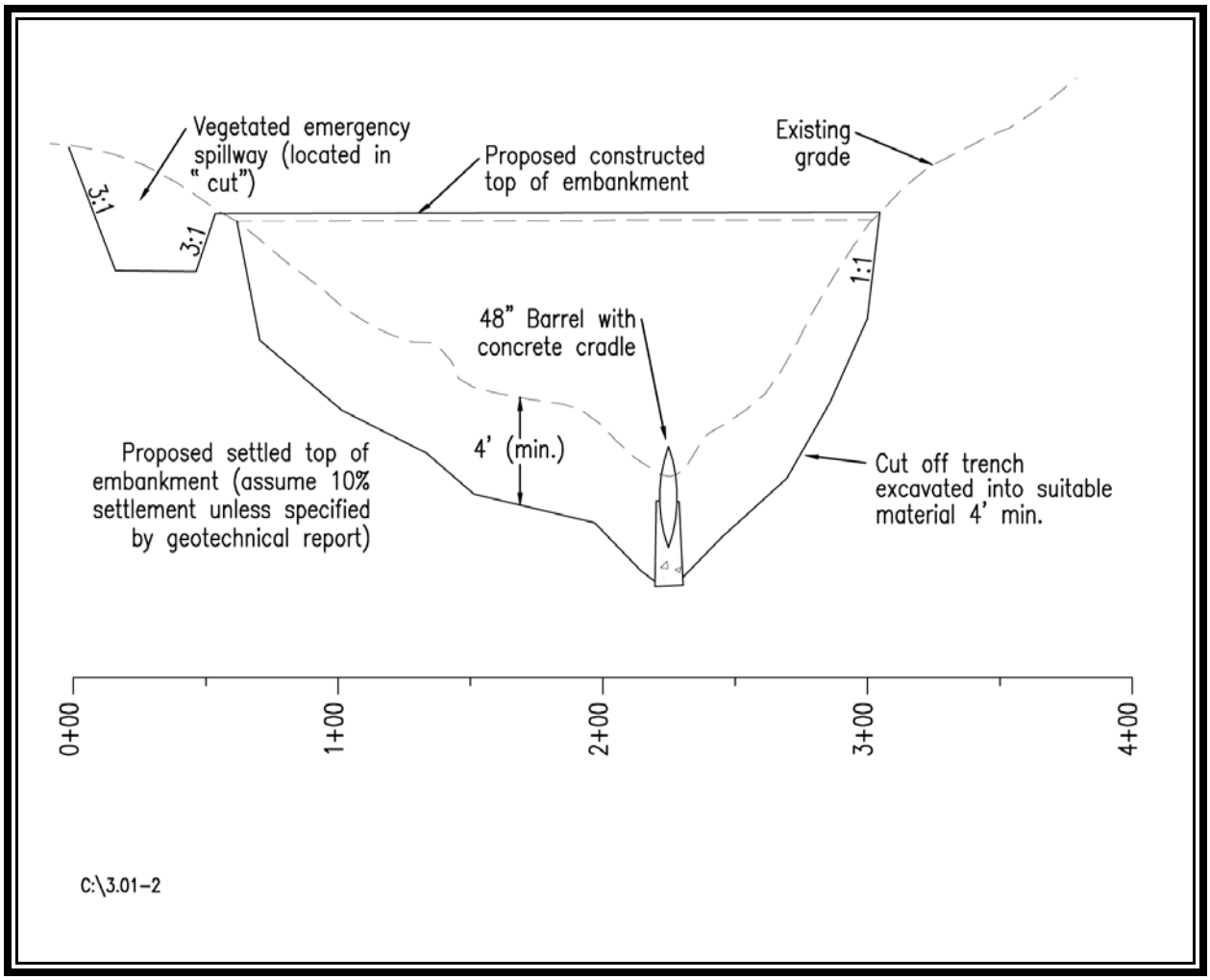

Embankment Geometry

1. **Height** - The height of an earthen embankment is based upon the freeboard requirements relative to the maximum water surface elevation during the 100-year frequency storm event. **An embankment <u>with</u> an emergency spillway must provide at least 1 foot of freeboard from the maximum 100-year storm water surface elevation (WSE) to the lowest point on the top of the embankment (excluding the emergency spillway)**. (Note that the *spillway design storm W.S.E*, if specified, may be used instead of the 100-year elevation.)

An embankment <u>without</u> an emergency spillway must provide at least 2 feet of freeboard from the maximum 100-year storm WSE to the lowest point on the top of the embankment. (Note that the *spillway design storm WSE*, if specified, may be used instead of the 100-year elevation.)

2. ***Top Width*** - The top of an earthen embankment should be shaped to provide positive drainage. The top width is based on the following table:

TABLE 3.01 - 1
Embankment Top Widths

Total Height of Embankment (*ft.*)	Minimum Top Width (*ft.*)
14 or less	8
15-19	10
20-24	12
25 or more	15

<u>Compacted Fill</u>

The soil types, as covered in the geotechnical analysis, should be specified by using the Unified Soil Classification System.

The compaction requirements should include the percent of maximum dry density for the specified density standard, allowable range of moisture content, and maximum loose lift thickness. Refer to **Construction Specifications for Earthen Embankments** later in this standard. In general, the design of an embankment should account for approximately 10% settlement unless otherwise specified by a geotechnical report based on the embankment foundation and fill material. The top of the embankment must be level in order to avoid possible overtopping in one location in cases of extreme storms or spillway failure.

Compaction tests should be performed regularly throughout the embankment construction; typically, one test per 5,000 square feet on each layer of fill or as directed by the geotechnical engineer. Generally, one of two compaction tests will be specified for embankment construction: the *Standard Proctor Test* (ASTM D698) or the *Modified Proctor Test* (ASTM D1557). For the construction of earth dams, the Modified Proctor Test is likely to be more appropriate (Terzaghi,

Peck, 1948).This is due in part to the unconfined nature of the earth fill for dam construction. A new Proctor test is required if the material changes from that previously tested.

Embankment Construction

A geotechnical or construction inspector should be on site during embankment construction. Inspectors should be required to do more than just test fill compaction, i.e., observe foundation preparation, pipe installation, riser construction, filter installation, etc. (Refer to inspection checklist for impoundment structures, **Appendix 3**).

A vertical trench through the embankment material to place the spillway pipe should not be allowed under any circumstances. Trench side slopes should be laid back in steps at a 2:1 slope, minimum.

Maintenance and Safety

Embankment slopes should be no steeper than 3H:1V if possible, with a maximum combined upstream and downstream slope of 5:1 (3:1 downstream face and 2:1 upstream face). For embankments exceeding 15 feet in height, a 6 to 10 foot wide bench should be provided at intervals of 10 to 15 feet of height, particularly if slopes are steeper than 3H:1V.

The following design considerations are provided to help reduce the long-term maintenance burden on the owner(s):

1. *Internal drainage systems in embankments (e.g., drainage blankets, toe drains)* should be designed such that the collection conduits discharge downstream of the embankment at a location where access for observation is possible by maintenance personnel.

2. *Adequate erosion protection* is recommended along the contact point between the face of the embankment and the abutments. Runoff from rainfall concentrates in these areas and may reach erosive velocities depending on the gutter slope and embankment height. Although a sod gutter will be satisfactory for most small embankments, an evaluation should be made to decide if another type of gutter protection is required. For most embankments, a riprap gutter is preferred to a paved concrete gutter.

3. *Trees, shrubs, or any other woody plants should not be planted on the embankment* or adjacent areas extending at least 25 feet beyond the embankment toe and abutment contacts.

4. *Access should be provided to all areas of an impoundment that require observation or regular maintenance*. These areas include the embankment, emergency spillway, basin shoreline, principal spillway outlet, stilling basin, toe drains, riser structure, extended-drawdown device, and likely sediment accumulation areas.

FIGURE 3.01 - 3
Profile Along Centerline of Principal Spillway

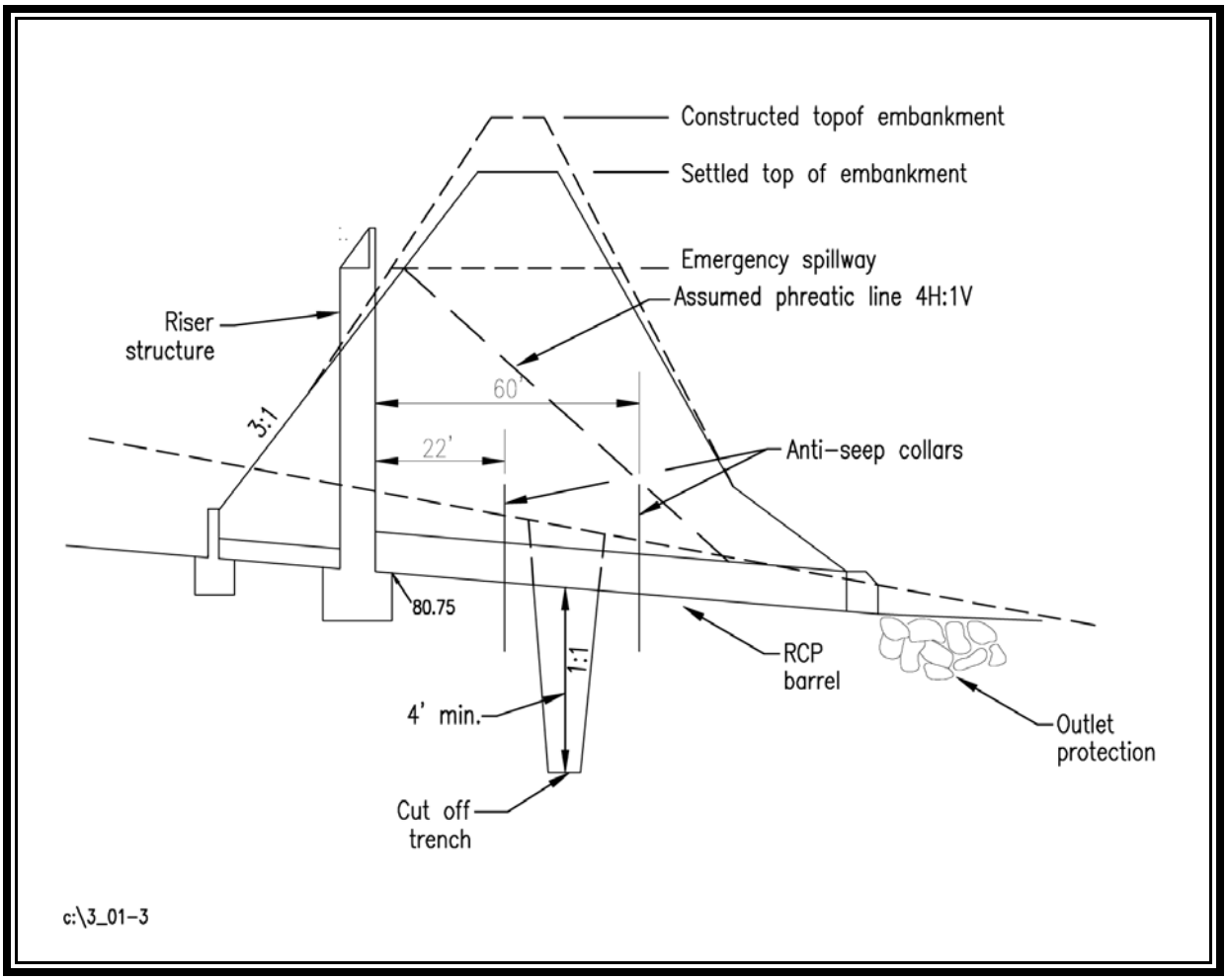

Construction Specifications

The construction specifications for earthen embankments outlined below should be considered as minimum guidelines, with the understanding that more stringent specifications may be required depending upon individual site conditions, as evaluated by the geotechnical engineer. Final construction specifications should be included on the construction plans. In general, widely accepted construction standards and specifications for embankments, such as those developed by the USDA Soil Conservation Service or the U. S. Army Corps of Engineers, should be followed.

Further guidance can be found in the SCS Engineering Field Manual and National Engineering Handbook. Specifications for the embankment work should conform to the methods and procedures indicated for installing earthwork, concrete, reinforcing steel, pipe, water gates, metal work, woodwork and masonry, as they apply to the site and the purpose of the structure. The specifications should also satisfy all requirements of the local government.

Site Preparation

Areas designated for borrow sites, embankment construction, and structural work should be cleared, grubbed and stripped of topsoil. All trees, vegetation, roots and other objectional material should be removed.

All cleared and grubbed material should be disposed of outside and below the limits of the embankment and reservoir, as directed by the owner or his representative. When specified, a sufficient quantity of topsoil should be stockpiled in a suitable location for use on the embankment and other designated areas.

Earth Fill

1. **Material** - Fill material should be taken from an approved, designated borrow area. It should be free of roots, stumps, wood, rubbish, stones greater than 6 inches, and frozen or other objectionable materials. Fill material for the center of the embankment and the cutoff trench should conform to Unified Soil Classification GC, SC, or CL. Consideration may be given to the use of other materials in the embankment if the design and construction are supervised by a geotechnical engineer.

2. **Placement** - Areas on which fill is to be placed should be scarified before its placement. Fill material should be placed in layers a maximum of 8 inches thick (before compaction), which should be continuous over the entire length of the fill. The most permeable borrow material should be placed in the downstream portions of the embankment. The principal spillway must be installed concurrently with fill placement and **not excavated** into the embankment.

3. **Compaction** - Fill material should be compacted with appropriate compaction equipment such as a sheepsfoot, rubber-tired or vibratory roller. The number of required passes by the compaction equipment over the fill material may vary with soil conditions. Fill material should contain sufficient moisture such that the required degree of compaction will be obtained with the equipment used.

   The minimum required density is 95% of maximum dry density with a moisture content within ± 2% of the optimum, unless otherwise specified by the engineer. Each layer of the fill should be compacted as necessary to obtain minimum density and the engineer should certify, at the time of construction, that each fill layer meets the minimum density requirement. All compaction is to be determined by either Standard Proctor Test (ASTM D698) or the Modified Proctor Test (ASTM D1557) as directed by the geotechnical enginer based on site and soil conditions and the size and type of structure being built.

4. **Cutoff Trench** - The cutoff trench should be excavated into impervious material along or parallel to the centerline of the embankment as shown on the plans. The bottom width of the trench should be governed by the equipment used for excavation, with the minimum width being 4 feet. The depth should be at least 4 feet below existing grade or as shown on the plans. The side slopes of the trench should be 1H:1V or flatter. The backfill should be compacted with construction equipment, rollers, or hand tampers to assure maximum density and minimum permeability.

5. **Top Soil** - The surface layer of compacted fill should be scarified prior to placement of at least 6 inches of top soil. The top soil shall be stabilized with in accordance with the Virginia Erosion and Sediement Control Handbook, latest edition.

Structure and Conduit Backfill

Backfill that is beside pipes or structures should be of the same type and quality as specified for the adjoining fill material. The fill should be placed in horizontal layers not to exceed 4 inches in thickness and compacted by hand tampers or other manually directed compaction equipment. The material should completely fill all spaces under and beside the pipe. During the backfilling operation, equipment should not be driven closer than 4 feet, as measured horizontally, to any part of a structure. Also, equipment should **NEVER** be driven over any part of a structure or pipe, unless compacted fill has been placed to a depth specified by the structural live load capacity of the structure or pipe in order to adequately distribute the load.

Filters and Drainage Layers

In order to achieve maximum density of clean sands, filter layers should be flooded with clean water and vibrated just after the water drops below the sand surface. The filter material should be placed in lifts of no more than 12 inches.

Up to four feet of embankment material may be placed over a filter material layer before excavating back down to expose the previous layer. After removing any unsuitable materials, the trench may be filled with additional 12 inch lifts of filter material, flooded, and vibrated as described above, until the top of adjacent fill is reached.

Filter fabrics should not be used in lieu of sands and gravel layers within the embankment.

Maintenance and Inspection Guidelines

A thick, healthy grass cover, free of trees and brush, should be maintained on the embankment. Such a cover will help stabilize the surfaces of the embankment and will simplify inspections.

The maintenance and inspection guidelines presented below are **NOT** all-inclusive. Specific facilities may require other measures not discussed here. It is the designer's responsibility to decide if additional measures are necessary.

1. The embankment should be mowed periodically during the growing season, ensuring that the last cutting occurs at the end of the season. The grass should not be cut less than 6 to 8 inches in height.

2. If necessary, the embankment should be limed, fertilized and seeded in the fall, after the growing season. Lime and fertilizer application rates should be based on soil test results. The type of seed should be consistent with that originally specified on the construction plans.

3. All erosion gullies noted during the growing season should be backfilled with topsoil, reseeded and protected (mulched) until vegetation is established.

4. All bare areas and pathways on the embankment should be properly seeded and protected (mulched) or otherwise stabilized to eliminate the potential for erosion.

5. All animal burrows should be backfilled and compacted and burrowing animals should be removed from the area.

6. All trees, woody vegetation and other deep-rooted growth, including stumps and associated root systems, should be removed from the embankment and adjacent areas extending to at least 25 feet beyond the embankment toe and abutment contacts. The root systems should be extracted and the excavated volume replaced and compacted with material similar to the surrounding area. All seedlings should be removed at the first

opportunity. Similarly, any vine cover and brush should be removed from the embankment to allow for inspections.

7. Any repairs made to the princpal spillway (riser or barrel) should be reviewed by a professional engineer. Vertical trenching to expose the barrel should not be allowed under any circumstances. The trench side slopes should be stepped back at a 2:1 slope, minimum.

REFERENCES

ASTM D-2487. Classification of Soils for Engineering Purposes.

ASTM D-2488. Description and Identification of Soils (visual-manual procedure).

Maryland Department of the Environment-Dam Safety Division. Dos and Don'ts for Pond Construction. May 1997.

Sowers, George F. Introductory Soil Mechanics and Foundations: Geotechnical Engineering.

Terzaghi and Peck. Soil Mechanics in Engineering Practice.

USDA Soil Conservation Service. Engineering Field Manual.

USDA Soil Conservation Service. National Engineering Handbooks.

USDA Soil Conservation Service, Soil Mechanics Notes:

SM Note No. 1, Guide for Determining the Gradation of Sand and Gravel Filters.
SM Note No. 2, Light Weight Piston Sampler for Soft Soils and Loose Sands.
SM Note No. 3, Soil Mechanics Considerations for Embankment Drains.
SM Note No. 4, Preparation and Shipment of Undisturbed Core Samples.
SM Note No. 5, Flow Net Construction and Use.
SM Note No. 6, Glossary, Symbols, Abbreviations, and Conservation Factors.
SM Note No. 7, The Mechanics of Seepage Analysis.
SM Note No. 8, Soil Mechanics Testing Standards.
SM Note No. 9, Permeability of Selected Clean Sands and Gravels.
SM Note No. 10, The Static Cone Penatrometer: The Equipment and Using the Data.

USDA Soil Conservation Service, Technical Releases:

TR 709. Dimensioning of Filter-Drainage Diaphragms for Conduits According to TR-60.
TR 026. The Use of Soils Containing More Than 5% Rock Larger Than the No.4 Sieve.
TR 027. Laboratory and Field Test Procedures for Control of Density and Moisture of Compacted Earth Embankments.
TR 028. Clay Minerals.
TR 071. Rock Materials Field Classification Procedure.
TR 60. Earth Dams and Reservoirs

U.S. Department of the Interior. Design of Small Dams. 1987.

U.S. Department of the Interior, Bureau of Reclamation. Guidelines for Controlling Seepage Conduits through Embankments.

Virginia Department of Conservation and Recreation. Virginia Erosion and Sediment Control Handbook. Richmond, Virginia: 1992.

Chapter 3.01

Typical Earthen Embankment

Stabiliazation of newly constructed Earthen Embankment

Earthen Embankment

MINIMUM STANDARD 3.02

PRINCIPAL SPILLWAY

View BMP Images

LIST OF ILLUSTRATIONS

#	FIGURES	PAGE
3.02 - 1(a-g)	Typical Principal Spillway Structures	3.02-4 - 3.02-10
3.02 - 2	Anti-Seep Collar	3.02-14
3.02 - 3	Graded Filter Diaphragm for Seepage Control Around Conduit	3.02-15
3.02 - 4	Concrete Cradle	3.02-20
3.02 - 5	Trash Rack	3.02-24
3.02 - 6	Anti-Vortex Device	3.02-25

#	TABLES	PAGE
3.02 - 1	Minimum Gages for Metal Pipes	3.02-29
3.02 - 2	Acceptable PVC Pipe for Use in Earth Dams	3.02-30
3.02 - 3	Gabion Basket Criteria	3.02-31

MINIMUM STANDARD 3.02

PRINCIPAL SPILLWAY

Definition

A principal spillway is the primary outlet device for a stormwater impoundment. It usually consists of either a *riser structure in combination with an outlet conduit*, which extends through the embankment, or *a weir control section* cut through the embankment.

Purpose

The purpose of a principal spillway is to provide a primary outlet for storm flows, usually up to the 10- or 25-year frequency storm event. The principal spillway is designed and sized to regulate the allowable discharge from the impoundment facility.

Conditions Where Practice Applies

A principal spillway is used on any impoundment BMP, including retention, extended-detention, and detention facilities. It may also be used with constructed wetlands and infiltration measures.

Planning Considerations

A principal spillway typically consists of a *multistage riser structure* and an outlet conduit or a *weir* that allows flow to pass over a *control section* of the embankment. The shape and geometry of the weir as well as that of the riser structure can be manipulated to meet the needs of the specific facility. The use of a weir as the principal spillway eliminates the barrel projecting through the embankment. The barrel through the embankment and the associated piping and seepage control represent not only significant material and construction costs, but also the potential trouble spots for long term maintenance and possible repair.

The most common type of riser structure is a *drop inlet spillway*. A drop inlet spillway usually consists of a rectangular or other shaped riser structure containing one or several openings sized to control one or more discharge rates. For aesthetic or safety concerns, the drop inlet riser structure may be installed in the embankment with only its top showing. The discharge openings may be extended to the design water surface elevations with pipe. See **Figures 3-02.1(a-f)** for typical riser structures and locations.

The barrel shape or geometry and size through the embankment is based upon the required flow capacities and availability of materials.

Design Criteria

The purpose of this section is to provide minimum design recommendations and guidelines for principal spillway systems (riser structure and barrel). The designer is responsible for determining those aspects that are applicable to the particular facility being designed, and for determining if any additional design elements are required to insure the long-term functioning of the system.

The crest elevation of the principal spillway must be at least 1.0 ft. below the crest of the emergency spillway.

Drop Inlet Spillways

Drop inlet spillways (riser and barrel system) should be designed such that a) *full flow is established in the outlet conduit and riser at the lowest head over the riser crest as is practical*, and b) *the facility operates without excessive surging, noise, vibration, or vortex action at any stage*. To meet these two requirements, the riser must have a larger cross-sectional area than the outlet conduit. **Chapter 5** provides the basic hydraulic calculation procedures needed to design the spillway riser and barrel system.

Headwall/Conduit Spillways

Headwall spillways consist of a pipe extending through an embankment with a headwall at the upstream end. The headwall is typically oversized to provide an adequate surface against which to compact the embankment fill.

Weir Spillways

A weir spillway, when used as a principal spillway, should be armored with concrete or other non-erosive material, since it usually carries water during every storm event. At the spillway, armoring should extend from the upstream face of the embankment to a point downstream of the spillway toe.

In general, all principal spillways should be constructed of a nonerosive material. The selected material should have an anticipated life expectancy similar to that of the stormwater management facility. Precast riser structures can not be substituted if plans call for a cast in place structure, unless approved by the design engineer and the plan approving authority. Sections of precast structures must be anchored together for stability and flotation requirements. A structural engineer should evaluate shop drawings for pipe, precast structures, or other fabricated appurtenances before fabrication or installation. **Cinder block and masonry block structures should not be used**.

Vegetated spillways designed to carry flow during the 100-year frequency storm or greater are discussed in **Minimum Standard 3.03**, **Vegetated Emergency Spillway**.

Combined Principal and Emergency Spillways

An *emergency spillway*, separated from the principal spillway, is generally recommended. However, using an overland emergency spillway at the embankment abutments may not be practical due to site limitations, such as the following:

- topographic conditions (e.g., abutments are too steep)
- land use conditions (e.g., existing or proposed development imposes constraints)
- other factors (e.g., roadway embankments are used as a dam, basins are excavated, etc.).

In these instances, a *combined principal/emergency spillway* may be considered. A combined principal/emergency spillway is simply a single spillway structure that conveys both low flows and extreme flows (such as the 100-year frequency flow). The combined spillway may take the form of a drop inlet spillway, a weir spillway, a headwall/conduit spillway or any other spillway type.

A primary design consideration for a combined principal/emergency spillway, particularly if it is a drop inlet spillway, is protection against clogging.

FIGURE 3.02 - 1a
Typical Principal Spillway Structures

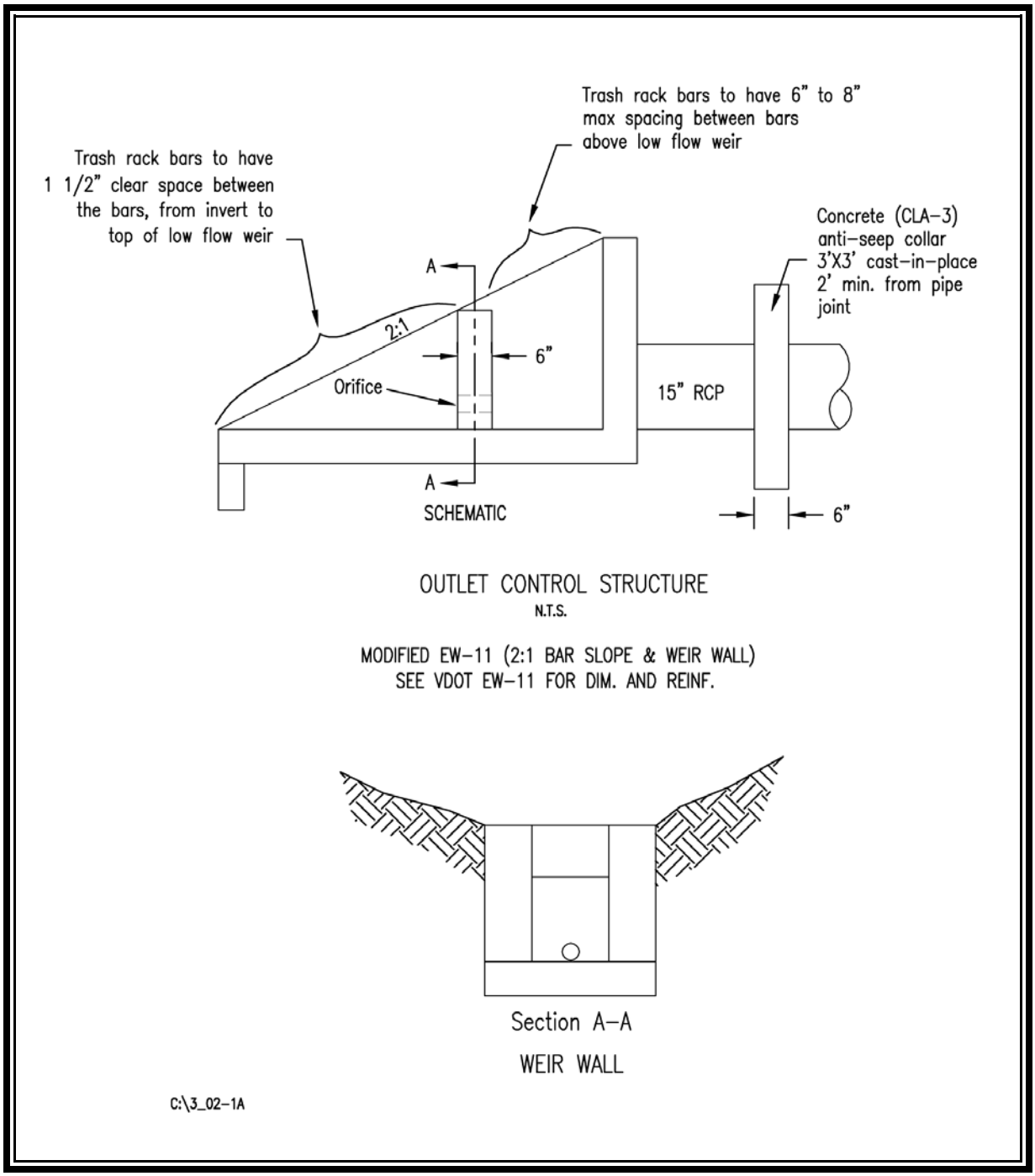

FIGURE 3.02 - 1b
Typical Principal Spillway Structures

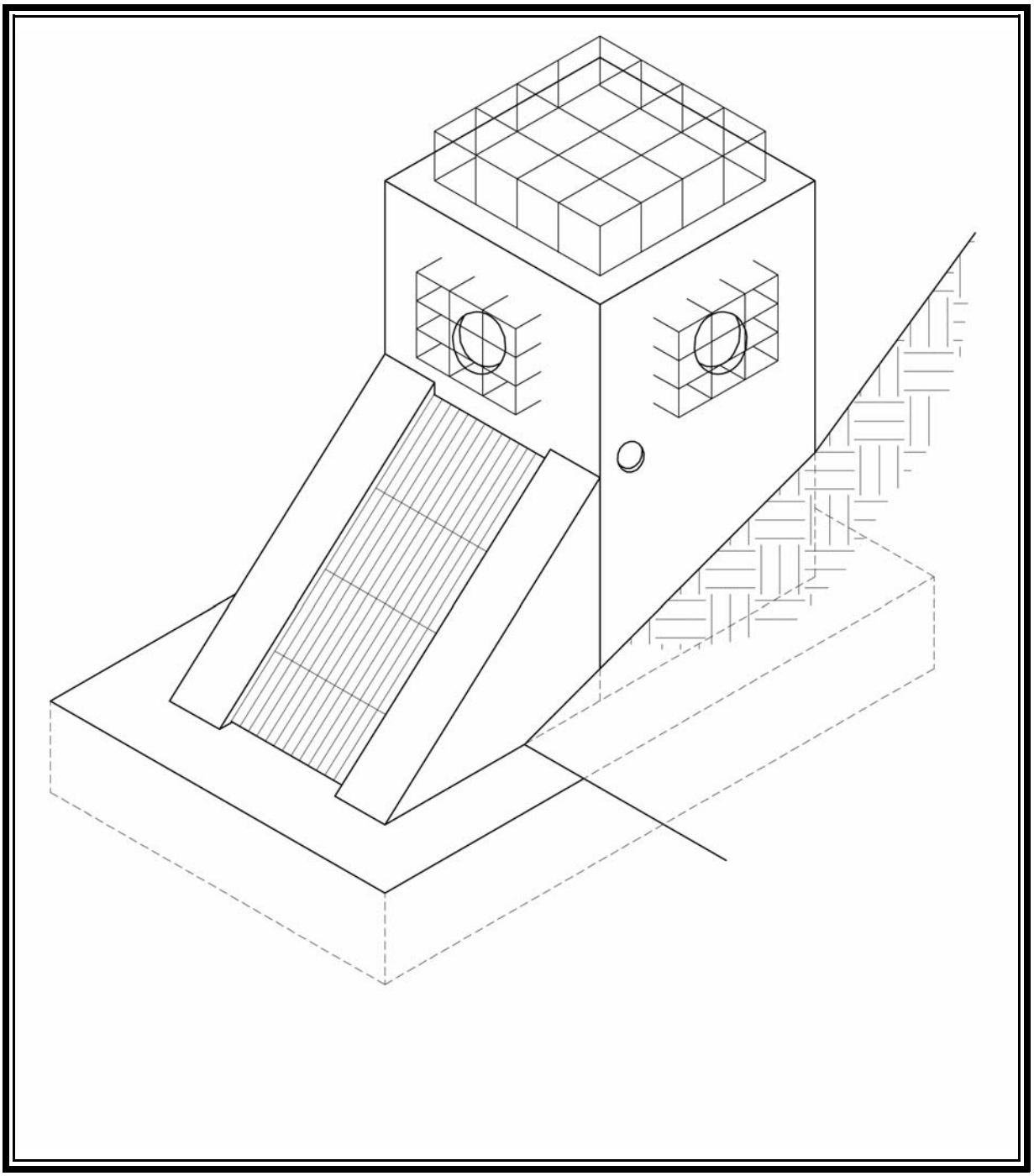

FIGURE 3.02 - 1c
Typical Principal Spillway Structures

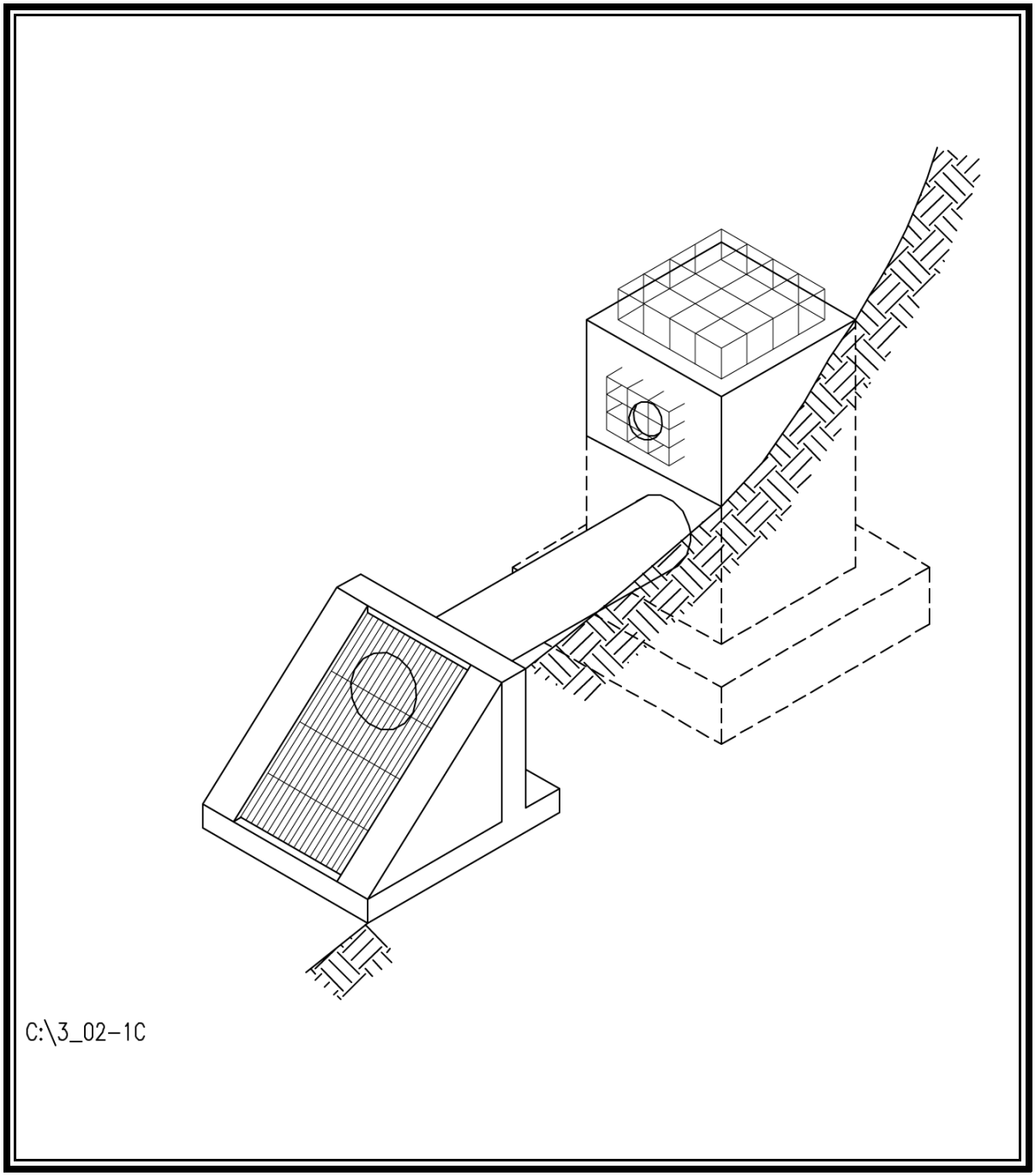

FIGURE 3.02 - 1d
Typical Principal Spillway Structures

FIGURE 3.02 - 1e
Typical Principal Spillway Structures

FIGURE 3.02 - 1f
Typical Principal Spillway Structures

FIGURE 3.02 - 1g
Typical Principal Spillway Structures

Conduits/Structures through Embankments

The *contact point* between the embankment soil, the foundation material, and the conduit is the most likely location for *piping* to occur due to the discontinuity in materials and the difficulty in compacting the soil around the pipe. Therefore, special attention must be given to the design of any conduit that penetrates an embankment.

It is highly recommended that the designer limit the number of conduits that penetrate through an embankment. Whenever possible, utility or other secondary conduits should be located outside of and away from the embankment. When additional conduits cannot be avoided, they should meet the requirements for spillways i.e., water tight joints, no gravel bedding, encasement in concrete or flowable fill, restrained to prevent joint separation due to settlement, etc.

Many embankment failures occur along the principal spillway because of the difficulty in compacting soil along a pipe. To help alleviate this concern, designers should consider the use of a weir as an control structure.

An additional cause of embankment failure is the separation of pipe joints due to differential settlement and pipe deflection. Corrugated metal pipe (CMP) must meet or exceed the minimum required thickness specified in **Table 3.02-1**. The contractor and project inspector should verify the metal thickness (compare manufacturer's certification which accompanies the pipe shipment with the plan specifications), corrugation size, proper connecting bands, and gasket type. Maximum allowable deflection of CMP conduits is 5% of the pipe diameter. However, with larger pipe sizes, it may be difficult to get water tight joints even if the deflection is less than that which is allowed. For increased design life, the engineer may choose to specify a heavier gage than indicated in **Table 3.02-1**.

Water tight joints are necessary to prevent infiltration of embankment soils into the conduit. All joints must be constructed as specified by the pipe manufacturer. "Field joints" where the ends of the pipes are cut off in the field should not be accepted. In addition, six inch hugger bands and "dimple bands" should not be accepted for CMP conduits. The construction specifications (found later in this Standard) specify 12-inch bands with 12-inch O-ring or flat neoprene gaskets for pipes 24 inches or less in diameter. Larger pipes require 24-inch wide bands with 24-inch wide flat gaskets and four "rod and lug" type connectors. Flanged pipe with gaskets is also permitted. Refer to the Construction Specifications in this standard for more information.

All pipe gaskets should be propely lubricated with the material provided by the pipe manufacturer.

Use of an incorrect lubricant may cause deterioration of gasket material.

Conduit Piping and Seepage Control – *Seepage* or *piping* along a pipe conduit, which extends through an embankment, should be controlled by use of one of the following: 1) *anti-seep collars*, as shown in **Figure 3.02-2**, or 2) *filter or drainage diaphragms* as shown in **Figure 3.02-3**. Concrete cradles, as discussed in item 3 below, may also be used.

Seepage control will not be required on pipes less than 6 inches in diameter.

1. *Anti-Seep Collars* - These collars lengthen the percolation path along the conduit, subsequently reducing the *exit gradient*, which helps to reduce the potential for piping. While this works well in theory, the required quality of compaction around the collars is very difficult to achieve in the field.

The Bureau of Reclamation, the U.S. Army Corps of Engineers, and the Soil Conservation Service no longer recommend the use of anti-seep collars. The Bureau of Reclamation issued Technical Memorandum No. 9 in 1987 that states:

> *"When a conduit is selected for a waterway through an earth or rockfill embankment, cutoff collars will not be selected as the seepage control measure."*

Alternative measures have been developed and used in the designs of major structures. These measures include *graded filters* or *filter diaphragms*, and *drainage blankets*. These devices are not only less complicated and more cost-effective to construct than the cutoff collars, but also allow for easier placement of the embankment fill.

Designers and engineers, however, continue to use anti-seep collars as the sole method of seepage control for small dams. This may be due to the complexity of the design procedure for graded filters. It may also be due to the designer's concern that little engineering supervision and/or inspection will occur during construction, which is generally necessary for the successful installation of graded filters.

Anti-seep collars, when used, should be installed around all conduits through earth fills according to the following criteria:

a. Enough collars should be placed to increase the seepage length along the conduit by a minimum of 15%. This percentage is based on the length of pipe in the saturation zone.

b. The assumed normal saturation zone should be determined by projecting a line through the embankment, with a 4H:1V slope, from the point where the normal water elevation meets the upstream slope to a point where it intersects the invert of the conduit. This line, referred to as the *phreatic line*, represents the upper surface of the zone of saturation within the embankment. For stormwater management basins, the phreatic line starting elevation should be the 10-year storm pool elevation. (See **Minimum Standard 3.01**, **Earthen Embankment**.)

c. Maximum collar spacing should be 14 times the minimum projection above the pipe. The minimum collar spacing should be 5 times the minimum projection.

d. Anti-seep collars should be placed within the saturation zone. In cases where the spacing limit will not allow this, at least one collar should be in the saturation zone.

e. All anti-seep collars and their connections to the conduit should be watertight and made of material compatible with the conduit.

f. Collar dimensions should extend a minimum of 2 feet in all directions around the pipe.

g. Anti-seep collars should be placed a minimum of 2 feet from pipe joints unless flanged joints are used.

The calculation procedure for sizing anti-seep collars is presented in Chapter 5: Multi-Stage Riser Design, STEP 15.

FIGURE 3.02 - 2
Anti-Seep Collar

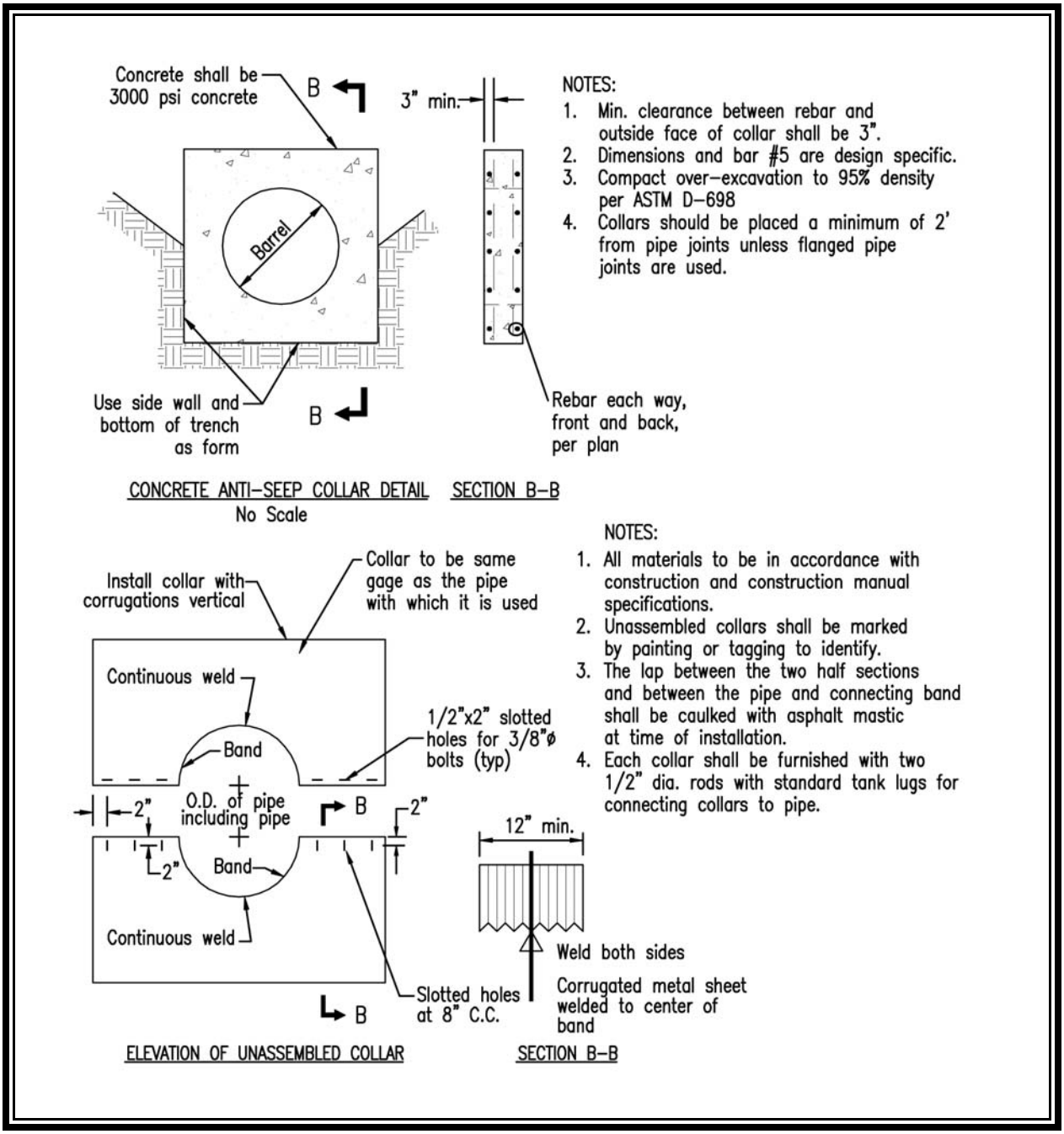

FIGURE 3.02 - 3
Graded Filter Diaphragm for Seepage Control Around Conduit

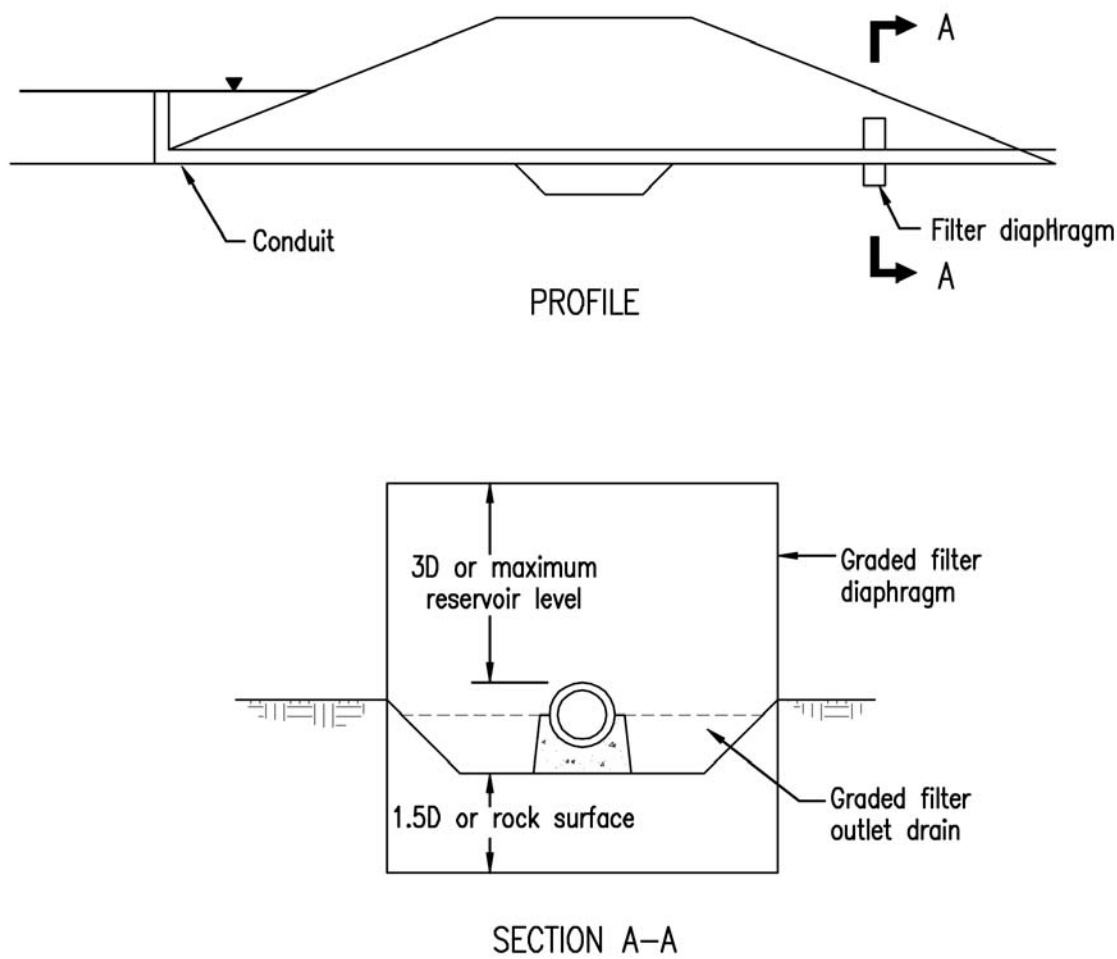

NOTES:
1. Delete filter diaphragm when conduit passes through chimney drain.
2. Delete outlet drain when filter diaphragm is connected to foundation drainage blanket.

c:\3_02–3

Source: Seepage Control Along Conduits Penetrating Embankment Dams, Ray E. Martin, Ph.D., P.E.

2. *Filter and Drainage Diaphragms* - Anti-seep collars extend the flow path along the conduit and, therefore, discourage piping. In contrast, filter and drainage diaphragms do not eliminate or discourage piping, rather they control the transport of embankment fines, which is the major concern in piping and seepage. Rather than trying to prevent seepage or increase its flow length, these devices channel the flow through a filter of fine graded material, such as sand, which traps any embankment material being transported. The flow is then conveyed out of the embankment through a perforated toe drain or other acceptable technique.

While filter and drainage diaphragms require careful design, the procedure is straightforward. The *grain size distribution* of the embankment fill and foundation material must be determined so that the filter material grain size distribution can be specified. If the specified filter material is not available on the site, it must be imported. The design procedure for filter and drainage diaphragms can be found in the following references:

- SCS TR-60
- SCS Technical Note No. 709
- SCS Soil Mechanics Notes 1 and 3 (Available upon request from DCR or NRCS)

There are some distinct advantages to using filter diaphragms over anti-seep collars:

- By eliminating the obstructions created by anti-seep collars, heavy compaction equipment can more thoroughly compact the embankment fill material adjacent to the conduit.

- The labor intensive formwork associated with anti-seep collar construction is eliminated.

- Cracks that form in the fill along the conduit will be terminated by the filter and will not propogate completely through the dam.

The design of filter and drainage diaphragms should be supervised by a geotechnical engineer. The critical design element is the grain size distribution of the filter material compared with that of the embankment fill and foundation material.

Overall, the following criteria apply to the use of filter and drainage diaphragms:

a. The diaphragm should consist of sand, meeting fine concrete aggregate requirements (at least 15% passing the No. 40 sieve but no more than 10% passing the No. 100 sieve). If unusual soil conditions exist, a special analysis should be completed.

b. The diaphragm should be a minimum of 3 feet thick and should extend vertically **upward** and **horizontally** at least 3 times the pipe diameter and vertically **downward** at least 24 inches beneath the barrel invert, or to rock, whichever is encountered first (SCS Tech. Note 709).

c. The diaphragm should be placed immediately downstream of the cutoff trench, approximately parallel to the centerline of the dam.

d. In order to achieve maximum density of clean sands, filter layers should be flooded with clean water and vibrated just after the water drops below the sand surface. The filter material should be placed in lifts of no more than 12 inches.

   Up to four feet of embankment material may be placed over a filter material layer before excavating back down to expose the previous layer. After removing any unsuitable materials, the trench may be filled with additional 12-inch lifts of filter material, flooded and vibrated as described above, until the top of adjacent fill is reached.

e. The diaphragm should be discharged at the downstream toe of the embankment. The opening sizes for slotted and perforated pipes in drains must be designed using the filter criteria. A second filter layer may be required around the drain pipe in order to alleviate the need for many very small openings. Fabric should <u>not</u> be used around the perforated pipe as it may clog rendering the perforations impenetrable by water.

The construction specifications for a filter diaphragm should include provisions to prevent settlement of the filter material upon saturation. This is usually accomplished by flooding the filter upon installation and compacting with vibratory equipment as soon as the water drops below the surface (Van Aller, 1990).

Whatever measures are taken to control seepage, proper construction techniques and inspection are critical to a successful project. The contractor should ensure that backfill material meets the specifications for *quality*, *lift thickness*, *placement*, *moisture content*, and *dry unit weight*. In addition, special care should be taken in the placement and compaction of the embankment material beside the barrel. Compaction along this conduit must extend away from the pipe enough to overlap with the compaction of the embankment. The use of filter and drainage diaphragms will ease this effort while providing greater protection against the damaging effects of piping and seepage.

During construction, it is recommended that filter and drainage diaphragms be inspected by a qualified professional. Inspection logs should be submitted along with any as-built plans.

3. *Concrete Pipe Bedding* - If the embankment fill material under the spring line of the conduit is **inadequately** compacted, *piping* may result. This problem is magnified if the conduit is not designed with flexible watertight joints; differential settlement of the embankment and foundation materials may pull the conduit joints apart, allowing the stormwater to escape into the surrounding soil, greatly adding to the piping condition. Installation of a concrete cradle will help to reduce the risk of piping under the barrel and the subsequent failure of the embankment, resulting from differential settlement.

Cradles not only provide conduit support, but also provide a better condition for the placement and compaction of backfill.

> Concrete cradles serve two distinctly different, yet related functions: 1) *they help to prevent piping along the conduit,* and 2) *they provide a 90E* ***bedding angle*** *for the loading support of the conduit. See* ***Figure 3.02 - 4****.*

The concrete cradle may not be necessary along the entire length of the conduit to prevent piping, but it is recommended. This will eliminate a sudden change in the support provided under the conduit. The load distribution of the conduit is assumed to be the same as the typical load distribution characteristics of reinforced concrete pipe (*RCP*). The external loading capacity of *RCP* depends upon a bedding condition that provides equal support around the base of the pipe. General pipe culvert installation specifications call for the placement of gravel under the pipe to distribute the load evenly. However, g**ravel bedding under an embankment conduit is <u>never</u> appropriate unless it is designed as a filter or drainage diaphragm.** Therefore, if the external load on the barrel is enough to warrant provision for its ***maximum supporting strength,*** then a concrete cradle should be installed along the conduit's entire length. Note that external loads on the barrel may be due to the height of the embankment fill, the anticipated construction traffic, or the weight of the compaction equipment.

Single Conduits – All conduits penetrating dam embankments should be designed using the following criteria:

a. Conduits and structures penetrating an embankment should have a smooth surface without protrusions or indentations that will hinder compaction of embankment materials.

b. All conduits should be circular in cross-section except cast-in-place reinforced concrete box culverts.

c. Conduits should be designed to withstand the external loading from the proposed embankment without yielding, buckling or cracking, all of which will result in joint seperation.

d. Conduit strength should not be less than the values shown in **Tables 3.02-1** and **3.02-2** for corrugated steel, aluminum, and PVC pipes, and the applicable ASTM standards for other materials. The manufacturer should submit certification that the pipe meets plan requirements for design load, pipe thickness, joint design, etc.

e. Inlet and outlet flared-end sections should be made from materials that are compatible with the pipe.

f. All pipe joints should be made watertight by using flanges with gaskets, coupling bands with gaskets, bell and spigot ends with gaskets, or by welding. See **Construction Specifications** later in this standard.

Multiple Conduits – Where multiple conduits are used, each conduit should conform to the requirements in item (b), above. In addition, sufficient space between the conduits and the installed anti-seep collars should be provided to allow for backfill material to be placed between the conduits with earth moving equipment and to allow for easy access by hand-operated compaction equipment. The distance between conduits should be equal to or greater than one-half of the pipe diameter, but not less than 2 feet.

FIGURE 3.02 - 4
Concrete Cradle

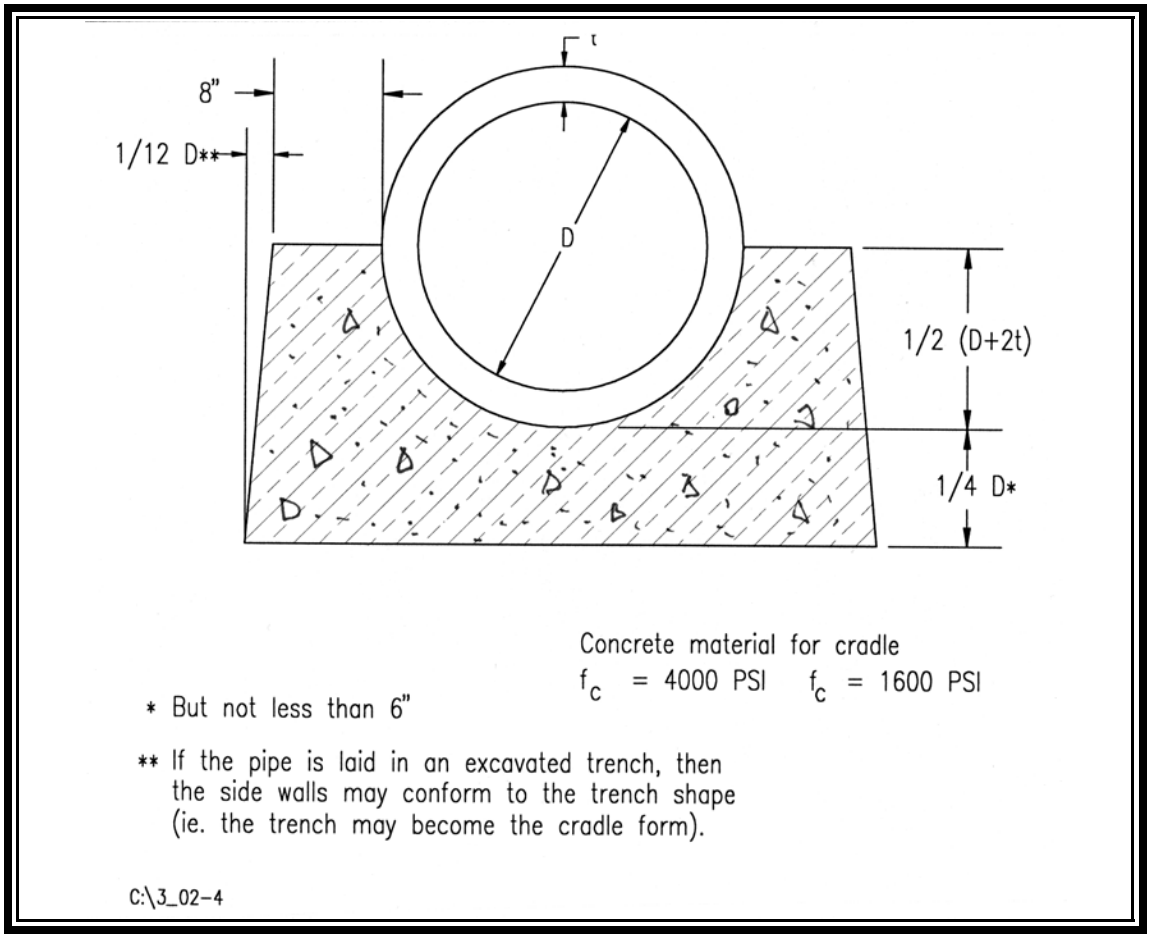

Cathodic Protection

In some areas of Virginia, sedimentary layers may be very acidic. This is particularly common in the coastal and piedmont regions east of the fall line, or roughly east of Interstate 95. Cathodic protection should be provided for *coated welded steel* and *galvanized corrugated metal* pipe when soil and resistivity studies indicate the need for a protective coating. Cathodic protection may also be provided when additional protection and longevity are warranted.

Outlet Protection

Outlet protection should be used on the downstream toe of a spillway structure to help dissipate the high energy flow through the spillway and to prevent excessive erosion in the receiving channel.

Various types of outlet protection can be used including: *riprap at the endwall or end-section of an outlet conduit* or a *designed hydraulic jump with impact blocks*. The type of outlet protection depends on the flow velocities associated with the spillway design flood and energy dissipation required. Riprap is the preferred form of outlet protection when designed according to **Chapter 5** of this handbook and the Virginia Erosion and Sediment Control Handbook (VESCH), 1992 edition. Gabion baskets are also an acceptable outlet protection material. Other references for designing outlet protection include publications by the Federal Highway Administration, the Soil Conservation Service, the Bureau of Reclamation and the U.S. Army Corps of Engineers.

The following general criteria are recommended for the placement of riprap at the outfall of a stormwater impoundment:

1. The bottom of the riprap apron should be constructed at 0% slope along its length. The end of the apron should match the grade and alignment of the receiving channel.

2. If the receiving channel is well-defined, the riprap should be placed on the channel bottom and side slopes (no steeper than 2:1) for the entire length, L_a, required per **Chapter 5** and the VESCH, 1992 edition. Riprap placement should not alter the channel's geometry. Excavation of the channel bed and banks may be required to construct the full thickness of the apron.

3. If the barrel discharges into the receiving channel at an angle, the opposite bank must be protected up to the 10-year storm elevation. In no instance should the total length of outlet protection be shortened. If a permit requires that no work may be performed in the stream or channel, then the outlet structure should be moved back to allow for adequate protection.

4. The horizontal alignment of the apron should have no bends within the design length, La. Additional rip rapshould be placed if a significant change in grade occurs at the downstream end of the outfall apron.

5. Filter fabric should be placed between the riprap and the underlying soil to prevent soil movement into and through the riprap.

Trash Racks and Debris Control Devices

Most basins will collect a certain amount of trash and debris from incoming flows. Floating debris such as grass clippings, tree limbs, leaves, trash, construction debris, and sediment bed load from upstream watersheds are common. Therefore, all control structures, including detention, extended-detention and retention basin low-flow weirs and orifices should have a trash rack or debris control device. The following are recommended design criteria for trash racks and debris control devices:

1. Openings for trash racks should be no larger than one-half of the minimum conduit dimension, and to discourage child access, bar spacing should be no greater than 1 foot apart. The clear distance between the bars on large storm discharge openings should generally be no less than 6 inches.

2. **Flat grates for trash racks are not acceptable**. Inlet structures that have flow over the top should have a non-clogging trash rack such as a hood-type inlet that allows passage of water from underneath the trash rack into the riser, or a vertical or sloped grate. The designer should verify that the surface area of the vertical perimeter of a raised grate equals the area of the horizontal top opening. This will allow adequate flow passage should the top horizontal surface become clogged. Examples are shown in **Figure 3.02-5**.

3. Metal trash racks and monitoring hardware should be constructed of galvanized or stainless steel metal.

4. Methods to prevent clogging of extended detention orifices in dry extended detention basins should be carefully designed since these orifices are usually very small and located at the invert or bottom of the basin (refer to **Minimum Standard 3:07, Extended Detention Basin**).

Anti-vortex Device

All drop inlet spillways designed for pressure flow should have adequate anti-vortex devices. An anti-vortex device is not required if weir control is maintained in the riser through all flow stages, including the maximum design storm or safety storm.

An anti-vortex device may be a baffle or plate installed on top of the riser, or a headwall set on one side of the riser. Examples of anti-vortex devices are shown in **Figure 3.02-6**.

Drain Pipes and Valves

Stormwater management facilities having permanent impoundments may be designed so that the permanent pool can be drained to simplify maintenance and sediment removal. The draining mechanism will usually consist of a valve or gate attached to the spillway structure and an inlet pipe projecting into the reservoir area with a trash rack or debris control device. The typical configuration of a drainpipe will place the valve inside the riser structure with the pipe extending out to the pool area. This configuration results in the drain pipe being pressurized by the hydraulic head associated with the permanent pool. Pressurized drain pipes should consist of mechanical joints in order to avoid possible leaks and seepage resulting from this condition. In all cases, valves should be secured to prevent unauthorized draining of the facility.

Basin drains should be designed with sufficient capacity to pass the 1-year frequency design storm with limited ponding in the reservoir area, such that sediment removal or other maintenance functions are not hampered.

An uncontrolled or rapid drawdown of a stormwater basin could cause a slide in the saturated upstream slope of the dam embankment or shoreline area. Therefore, the design of a basin drain system should include specific operating instructions for the owner. **Generally, drawdown rates should not exceed 6 inches per day**. For embankments or shoreline slopes of clay or silt, drawdown rates as low as *1 inch per week* may be required to ensure slope stability. (FPFM, 1994).

Antiflotation

The design of a principal spillway riser structure should include a *flotation* or *buoyancy* calculation.

When the ground around the riser is saturated and the water surface elevation in the basin is higher than the riser footing, then the riser structure behaves like a "vessel" floating in water. Such flotation forces on the riser can lead to failure of the connection between the riser and barrel, and any other rigid connections.

The downward force of the riser and footing (assuming the riser is attached firmly to the footing) is the *structure weight.* To maintain adequate stability, this weight must be at least 1.25 times greater than the upward force, or buoyant force, acting on the riser.

An *anti-flotation* calculation procedure is presented in Chapter 5.

Maintenance and Safety

As mentioned previously, trash racks and debris control structures should be sized to prevent entry by children. Fencing or other barriers should be considered around spillway structures having open or accessible drops more than 3 feet. A locking manhole cover on the riser may also be prudent to prevent unauthorized access.

FIGURE 3.02 - 5
Trash Rack

FIGURE 3.02 - 6
Anti-Vortex Device

Construction Specifications

The construction specifications for principal spillways outlined below should be considered as minimum guidelines. More stringent requirements may be needed depending upon individual site conditions. Overall, widely accepted construction standards and specifications, such as those developed by the USDA Soil Conservation Service or the U.S. Army Corps of Engineers, should be followed.

Further guidance can be found in the SCS Engineering Field Manual. Specifications for the work should conform to the methods and procedures specified for installing earthwork, concrete, reinforcing steel, pipe water gates, metal work, woodwork, and masonry, as they apply to the site and the purpose of the structure. The specifications should also satisfy all requirements of the local government. Final construction specifications should be included on the construction plans.

Corrugated Metal Pipe - The following criteria apply:

1. **Materials –** Corrugated metal pipe may be steel, aluminum coated steel or aluminum.

   a. *Steel Pipe* - This pipe and its appurtenances should be galvanized and fully bituminous coated and should conform to the requirements of AASHTO Specification M-190 Type A with watertight coupling bands. Any bituminous coating damaged or otherwise removed should be replaced with cold applied bituminous coating compound. Steel pipes with polymeric coatings should have a minimum coating thickness of 0.01 inches (10 *mils*) on both sides of the pipe. The following coatings or an approved equal may be used: Nexon, Plasti-Cote, Blac-Clad, and Beth-Cu-Loy. Coated corrugated steel pipe should meet the requirements of AASHTO M-245 and M-246.

   b. *Aluminum Coated Steel Pipe* - This pipe and its appurtenances should conform to the requirements of AASHTO Specification M-274 with watertight coupling bands or flanges. Any aluminum coating damaged or otherwise removed should be replaced with cold applied bituminous coating compound.

   c. *Aluminum Pipe* - This pipe and its appurtenances should conform to the requirements of AASHTO Specification M-196 or M-211 with watertight coupling bands or flanges. Aluminum surfaces that are to be in contact with concrete should be painted with one coat of zinc chromate primer. Hot dipped galvanized bolts may be used for connections. The pH of the surrounding soils should be between 4 and 9.

2. **Coupling bands, anti-seep collars, end-sections, etc.** - All connectors must be composed of the same material as the pipe. Metals must be shielded from dissimilar materials with rubber or plastic insulation at least 24 mils thick.

3. **Connections** - All connections to pipes must be completely watertight. The drain pipe (or barrel) connection to the riser should be welded all around when both are metal. Anti-seep collars should be connected to the pipe so that they are completely watertight. **Dimple bands are not considered watertight**.

   A rubber or neoprene gasket should be used when joining pipe sections. The end of each pipe should be re-rolled by enough corrugations to fit the band width. The following connection types are acceptable for pipes less than 24 inches in diameter: flanges with gaskets on both ends of the pipe, a 12-inch wide standard lap type band with a 12-inch wide by ½-inch thick closed cell circular neoprene gaskets, and a 12-inch wide hugger type band with 0-ring gaskets having a minimum diameter of 3/8 inches greater than the corrugation depth. Pipes 24 inches in diameter and larger should be connected by a 24-inch long annular corrugated band using rods and lugs and a 24 inch wide by 3/8 inch thick closed cell circular neoprene gasket. Helically corrugated pipe should have either continuous welded seams or lock seams with internal caulking or a neoprene bead.

   All pipe gaskets must be properly lubricated with the material provided by the pipe manufacturer, and tensioned. Flat gaskets must be factory welded or solvent glued into a circular ring, with no overlaps or gaps.

4. **Bedding** - The pipe should be firmly and uniformly bedded throughout its length. Where rock or soft, spongy or other unstable soil is encountered, it should be removed and replaced with suitable earth that is subsequently compacted to provide adequate support. Under no conditions should gravel bedding be placed under a conduit through the embankment.

5. **Backfill** - All backfill material and placement should conform to Structure Backfill specifications in **Minimum Standard 3.01, Earthen Embankment**.

<u>Reinforced Concrete Pipe</u> - The following criteria apply:

1. **Materials** - Reinforced concrete pipe should have bell and singular spigot joints with rubber gaskets and should equal or exceed ASTM Designation C-361.

2. **Bedding** - All reinforced concrete pipe conduits should be laid in a **concrete** bedding for their entire length. This bedding should consist of high slump concrete placed under the pipe and up the sides of the pipe at least 25% of its outside diameter, and preferrably to the spring line, with a minimum thickness of 3 inches, or as shown on the drawings.

3. **Laying pipe** - Bell and spigot pipe should be placed with the bell end upstream. Joints should be made per recommendations from the manufacturer. After the joints are sealed for the entire run of pipe, the bedding should be placed so that all spaces under the pipe are filled. Care should be taken to prevent any deviation from the original line and grade of the pipe.

4. **Backfill** - All backfill material and placement should conform to Structure Backfill specifications in **Minimum Standard 3.01, Earthen Embankment**.

Polyvinyl Chloride (PVC) Pipe - The following criteria apply:

1. **Materials** - PVC pipe should be PVC-1120 or PVC-1220 conforming to ASTM D-1785 or ASTM D-2241.

2. **Connections** - Joints and connections to anti-seep collars should be completely watertight.

3. **Bedding** - The pipe should be firmly and uniformly bedded throughout its length. Where rock or soft, spongy or other unstable soil is encountered, it should be removed and replaced with suitable earth that is subsequently compacted to provide adequate support.

4. **Backfill** - All backfill material and placement should conform to Structure Backfill specifications in **Minimum Standard 3.01, Earthen Embankment**.

Filters and Drainage Layers

In order to achieve maximum density of clean sands, filter layers should be flooded with clean water and vibrated just after the water drops below the sand surface. The filter material should be placed in lifts of no more than 12 inches.

Up to four feet of embankment material may placed over a filter material layer before excavating back down to expose the previous layer. After removing any unsuitable materials, the trench may be filled with additional 12-inch lifts of filter material, flooded, and vibrated as described above, until the top of adjacent fill is reached.

Filter fabrics should not be used in lieu of sands and gravel layers within the embankment.

TABLE 3.02 - 1
Minimum Gages for Metal Pipes

CORRUGATED STEEL PIPE *2-2/3" x ½" Corrugations*						CORRUGATED ALUMINUM PIPE *2-2/3" x ½" Corrugations*				
Fill Height Over Pipe *(ft.)*	**Pipe Diameter *(in.)***					**Fill Height Over Pipe *(ft.)***	**Pipe Diameter *(in.)***			
	24 & Less	**30**	**36**	**42**	**48**		**24 & Less**	**24**	**30**	**36**
1 - 15	16	16	14	10	8	1 - 15	16	14	10	8
16 - 20	16	12	8	*	*	16 - 20	12	10	*	*
21 - 25	16	10	*	*	*	21 - 25	10	*	*	*

CORRUGATED STEEL PIPE *3" x 1" or 5" x 1" Corrugations*								CORRUGATED ALUMINUM PIPE *3" x 1" Corrugations*					
Fill Height Over Pipe *(ft.)*	**Pipe Diameter *(in.)***							**Fill Height Over Pipe *(ft.)***	**Pipe Diameter *(in.)***				
	36	**42**	**48**	**54**	**60**	**66**	**72**		**30**	**36**	**42**	**48**	**54**
1 - 15	16	16	16	16	14	12	10	1 - 15	16	16	14	10	8
16 - 20	16	16	14	10	8	*	*	16 - 20	16	12	8	*	*
21 - 25	16	14	10	8	*	*	*	21 - 25	12	8	*	*	*

* Not permitted
Coatings for corrugated steel should be as specified in this handbook, or equivalent.

* Not permitted

Source: SCS Standards and Specifications for Ponds - Code 378

TABLE 3.02 - 2
Acceptable PVC Pipe for Use in Earth Dams[1]

Nominal Pipe Size *(in.)*	Schedule or Standard Dimension Ration *(SDR)*	Maximum Depth of Fill Over Pipe *(ft.)*
6 - 24	Schedule 40 Schedule 80 SDR 26	10 15 10
[1]Polyvinyl chloride pipe, PVC 1120 or PVC 1220, conforming to ASTM D-1785 or ASTM D-2241.		

Source: SCS Standards and Specifications for Ponds - Code 378

Concrete

Concrete should meet the requirements of the Virginia Department of Transportation (VDOT) Road and Bridge Specifications, latest edition.

Outlet Protection

Outlet protection should meet the requirements and construction specifications of the VESCH, 1992 edition, Std. & Spec. 3.18, Outlet Protection, and 3.19, Riprap, latest edition. Materials should conform to the following:

1. Filter fabric should meet or exceed the requirements in Standard & Specification 3.18 and 3.19 in the VESCH, 1992 edition.

2. Riprap should meet or exceed the requirements in Standard & Specification 3.18 and 3.19 in the VESCH, 1992 edition.

3. Gabion baskets should be made of hexagonal triple-twist mesh, PVC coated, heavily galvanized steel wire. The maximum linear dimension of the mesh opening should not exceed 4 1/2 inches and the area of the mesh opening should not exceed 10 square inches.

Stone or riprap for the baskets should be sized according to the following criteria:

TABLE 3.02 - 3
Gabion Basket Criteria

BASKET THICKNESS		STONE SIZE
inches	*millimeters*	*inches*
6	150	3 - 5
9	225	4 - 7
12	300	4 - 7
18	460	4 - 7
36	910	4 - 12

The stone or riprap should consist of field stone or rough, unhewn quarry stone. The stone should be hard and angular and of a quality that will not disintegrate from exposure to water or weather. The specific gravity of the individual stones should be at least 2.5.

Recycled concrete may be used and will be considered equivalent if it has a density of at least 150 pounds per cubic foot and no exposed steel or reinforcing bars.

Trash Rack and Debris Control Devices

All trash rack and debris control components should be stainless steel or galvanized metal per the Virginia Department of Transportation (VDOT) specifications. Trash racks attached to a concrete spillway structure should be secured with stainless steel anchor bolts.

Maintenance and Inspection Guidelines

This section presents general operation, maintenance and inspection guidelines for principal spillways and components. However, these guidelines are not intended to be all-inclusive. Specific structures may require special measures not discussed here. The engineer is responsible for determining what, if any, additional items are necessary.

1. Spillway structures should be cleared of debris periodically and after any significant rainfall event where inspection reveals a significant blockage.

2. During low water conditions, concrete spillway structures should be inspected to decide if water is passing through any joints or other structure contacts and to identify any cracks, spalling, broken or loose sections. Any cracked, spalled, broken or loose sections should be cleaned and refilled with an appropriate concrete patching material. A professional engineer should be consulted to repair extensive leakage, spalls or fractures.

3. Outlet protection (stilling basins) and discharge channels should be cleared of brush at least once per year.

4. Trash racks and locking mechanisms should be inspected and tested periodically to make sure they are intact and operative.

5. All sluice gates (or other types of gates or valves used to drain an impoundment) should be operated periodically to insure proper function. The gate and stem should be periodically lubricated and all exposed metal should be painted to protect it from corrosion.

6. Any repairs made to the principal spillway (riser or barrel) should be reviewed by a professional engineer. Vertical trenching to expose the barrel should not be allowed under any circumstances. The trench side slopes should be stepped back at a 2:1 slope, minimum.

REFERENCES

American Society of Civil Engineers. Stormwater Detention Outlet Control Structures. Task Commission On the Design of Outlet Control Structures, ASCE. New York, NY: 1985.

Brater, E.F., and H.W. King. Handbook of Hydraulics. 6th ed. New York: McGraw Hill Book Company, 1976.

Debo, T.N., and A.J. Reese. Municipal Stormwater Management. 1995.

Federal Highway Administration. Debris-Control Structures. Hydraulic Engineering Circular No. 9, 1971.

Federal Highway Administration. Hydraulic Design of Highway Culverts. Hydraulic Design Series No. 5, 1985.

Maryland Department of the Environment-Dam Safety Division, DOs and DON'Ts for Pond Construction, May 1997.

Rossmiller, R.L. Outlet Structure Hydraulics for Detention Facilities. Proc. Int. Symp. On Urban Hydrology, Hydraulics and Sediment Control. University of Kentucky, KY: 1982.

Sandvik, A. "Proportional Weirs for Stormwater Pond Outlets." Civil Engineering. ASCE. pp. 54- 56. March, 1985.

U.S. Department of the Interior Bureau of Reclamation. ACER Technical Memorandum No. 9, Guidelines for Controlling Seepage Along Conduits Through Embankment. 1987.

USDA Soil Conservation Service T.R. 5, Appendix C. Evaluation of the Settlement Ratio for Positive Projecting Conduits.

USDA Soil Conservation Service. Technical Note Series No. 709, Dimensioning of Filter-Drainage Diaphragms for Conduits According to TR-60. April, 1985.

U. S. Department of the Interior, Bureau of Reclamation. Design of Small Dams. 1987.

USDA Soil Conservation Service. Engineering Field Manual, National Engineering Handbook.

Virginia Department of Conservation and Recreation. Virginia Erosion and Sediment Control Handbook (VESCH) 1992 edition.

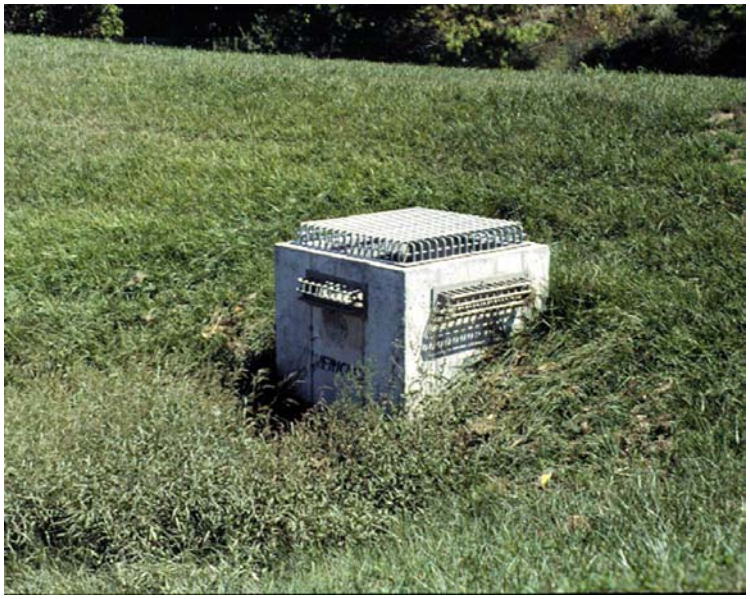

Principal Spillway multi-stage riser. Note bird-cage type trash rack to prevent clogging.

Principal Spillway multi-stage riser configured for temporary sediment basin function. Note anti-vortex plate and inclined trash rack to prevent clogging.

Principal Spillway

Principal Spillway multi-stage riser – "V" shaped weir protected by trash rack.

Principal Spillway multi-stage weir. Note low flow/extended detention orifice protected by "hood" draws water from approximately 18" below pool surface.

Principal Spillway

MINIMUM STANDARD 3.03

VEGETATED EMERGENCY SPILLWAY

View BMP Images

LIST OF ILLUSTRATIONS

#	FIGURES	PAGE
3.03 - 1	Typical Plan and Profiles Along the Centerline of an Earth Spillway . . .	3.03 - 3

#	TABLES	PAGE
3.03 - 1	Permissible Velocities for Vegetated Spillways	3.03 -8
3.03 - 2	Retardance Classifications for Vegetative Channel Linings	3.03 -9

MINIMUM STANDARD 3.03

VEGETATED EMERGENCY SPILLWAY

Definition

A vegetated emergency spillway is an open channel, usually trapezoidal in cross-section, that is constructed beside an embankment. It consists of an *inlet channel*, a *control section,* and an *exit channel*, and is lined with erosion-resistant vegetation.

Purpose

The purpose of a vegetated emergency spillway is to convey flows that are greater than the principal spillway's design discharge at a *non-erosive velocity* to an *adequate channel*.

Conditions Where Practice

A vegetated emergency spillway is appropriate to use when the required maximum design flood volume exceeds the capacity of the principal spillway system. A vegetated emergency spillway may also be used as a safety feature to pass flood flows when or if the principal spillway becomes clogged.

Planning Considerations

The *adjacent topography* (steepness of the abutments), the *existing or proposed land* use, and *other factors* (such as a roadway over the embankment) influence the design and construction of a vegetated emergency spillway.

Vegetated emergency spillways must be built in existing ground or "cut." Therefore, additional land disturbance beside the embankment must be accounted for during the planning stages of a project. Sometimes, an emergency spillway may not be practical due to this or other considerations.

Remember, even though an emergency spillway helps to extend the life expectancy of an impoundment and lowers the associated downstream hazard conditions, it should not be located on any portion of the embankment fill.

If site topography or other constraints preclude the use of a vegetated emergency spillway in "cut," the principal spillway can be oversized to pass the additional flows or an *armored* emergency spillway may be provided. A cost analysis may be helpful to aid in the selection of the spillway type. If armoring is chosen, riprap, concrete or any other permanent, nonerodible surface may be used. Note, however, that **an armored emergency spillway over the top of an embankment should be designed by a qualified professional**.

Vegetated emergency spillways should be used only where the soils and topography will permit safe discharge of the peak flow at a point downstream from the embankment and at a velocity that will not cause appreciable erosion. Additional flood storage in the reservoir may be provided to reduce the design flow or the frequency with which the spillway is used.

Design Criteria

A vegetated emergency spillway is designed to convey a pre-determined design flood discharge without excessive velocities and without overtopping the embankment. **The maximum design water surface elevation through the emergency spillway should be at least 1 foot lower than the settled top of the embankment**.

Layout

Vegetated spillways should be constructed in undisturbed earth in the abutments at one or both ends of an earthen embankment or over a topographic saddle anywhere on the periphery of the basin. **The channel should be excavated into undisturbed earth or rock and the water surface, under maximum design flood discharge, should be confined by undisturbed earth or rock**.

Excavated spillways consist of three elements: 1) an *inlet channel*, 2) a *level section*, and 3) an *exit channel*. (See **Figure 3.03-1**.) Flow enters the spillway through the inlet channel. The depth of flow, H_p, located upstream from the level section, is controlled in the level section and then discharged through the exit channel. Flow in the inlet channel is *sub-critical*. Flow in the exit channel can be either *critical* or *supercritical*. **The control section is, therefore, the point on the spillway where the flow passes through critical depth**. It is recommended that the control section be installed close to the intersection of the earthen embankment and the emergency spillway centerlines.

FIGURE 3.03 - 1
Typical Plan and Profiles Along the Centerline of an Earth Spillway

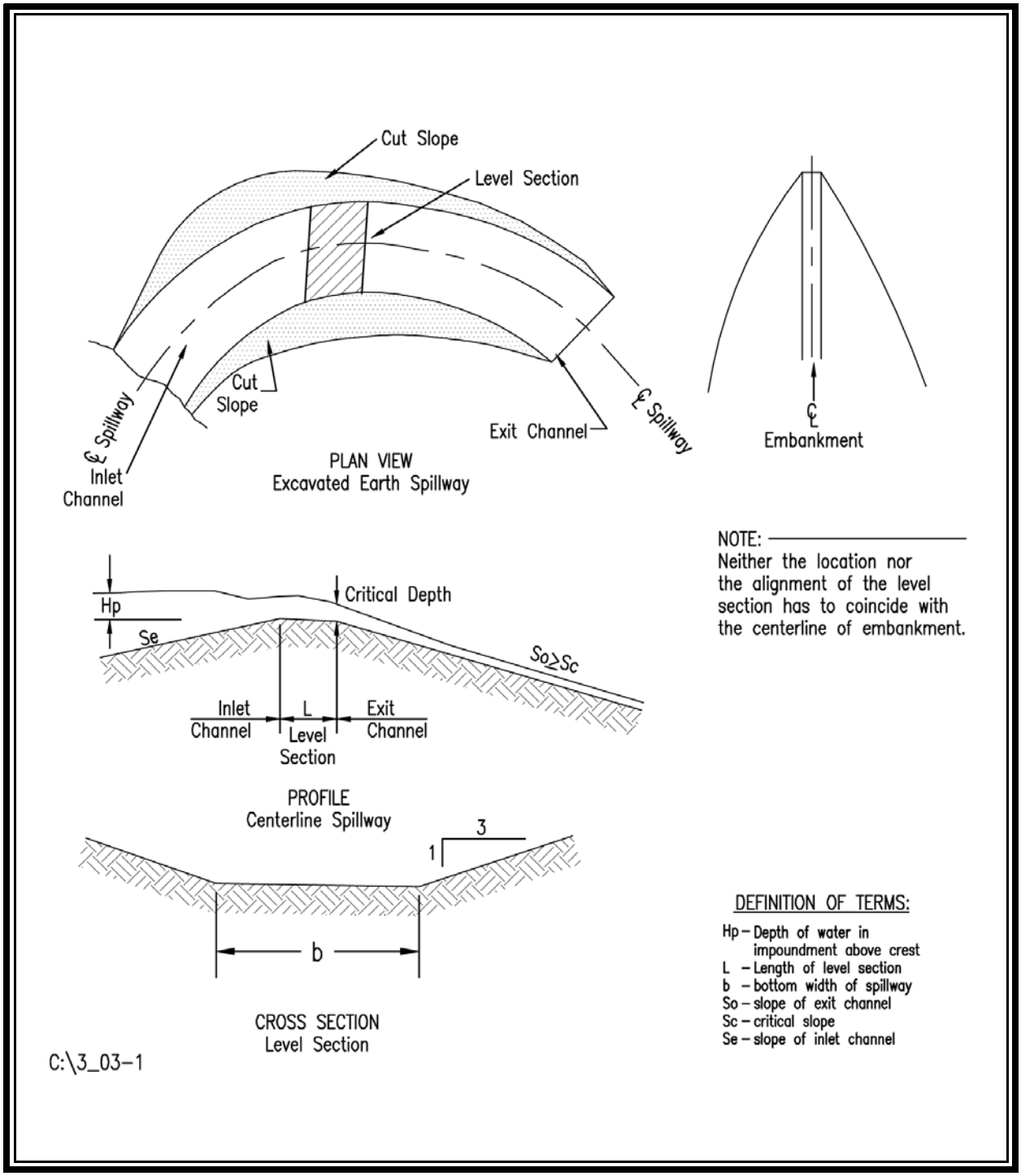

The topography must be carefully considered when constructing an emergency spillway. The alignment of the exit channel must be straight to a point far enough below the embankment to insure that any flow escaping the exit channel cannot damage the embankment. This may result in additional clearing and/or grading requirements beside the abutments, property line, etc.

Figure 3.03-1 shows profiles along the centerline of a typical vegetated spillway. To reduce losses through the inlet channel, the cross-sectional area of flow in the inlet channel should be large in comparison to the flow area at the control section. Where the depth of the channel changes to provide for the increased flow area, the bottom width should be altered gradually to avoid abrupt changes in the shape of the sloping channel banks.

The exit channel must have an adequate slope to discharge the peak flow within the channel. However, the slope must be no greater than that which will produce maximum permissible velocities for the soil type or the planned grass cover.

Soil Types and Vegetative Cover

The type of soil and vegetative cover used in an emergency spillway can be used to establish the spillway design dimensions (Procedure 2 - **Chapter 5-8**). Soil types are classified as *erosion resistant* and *easily erodible*. ***Erosion resistant soils*** are those with a high clay content and high plasticity. Typical soil textures for erosion resistant soils are silty clay, sandy clay, and clay. ***Easily erodible soils*** are those with a high content of fine sand or silt, and a low plasticity or non-plastic. Typical soil textures for easily erodible soils are fine sand, silt, sandy loam, and silty loam. **Table 3.03-1** provides permissible velocities for a vegetated spillway based on its soil type, vegetated cover, and exit channel slope. The maximum permissible velocity may be increased by 25% when the anticipated average use is less than once in 10 years.

In general, it is recommended that a vegetated emergency spillway be designed to operate during the 100-year frequency storm or greater.

The *type* and *length of vegetative cover* affect the design of a vegetated spillway. Vegetation provides a *degree of retardance* to the flow through the spillway. **Table 3.03-2** gives retardance values for various heights of vegetative cover. Retardance for a given spillway will depend mostly upon the *height* and *density* of the cover chosen. Generally, after the cover is selected, "retardance with a good, uncut condition" should be used to find the capacity. Since a condition offering less protection and less retardance exists during the establishment period and after mowing, a lower degree of retardance should be used when designing for stability. Refer to the sample exercises for the design of vegetated spillways found in **Chapter 5**.

Hydraulic Design

The hydraulic design of earthen spillways can be simplified if the effects of *spillway storage* are ignored. Stormwater facilities designed for compliance with state or local stormwater management regulations are typically small, resulting in minimal storage effects on the flood routing.

Two design calculation procedures are presented in **Chapter 5-8**. The first (Procedure 1) is a conservative design procedure which is also found in the Virginia Erosion & Sediment Control Handbook (VESCH) 1992 edition, (Std., & Spec. 3.14). This procedure is typically acceptable for stormwater management basins. The second method (Procedure 2) utilizes the roughness, or retardance, and durability of the vegetation and soils within the vegetated spillway. This second design is appropriate for larger or regional stormwater facilities where the construction inspection and permanent maintenance are more readily enforced. These larger facilities typically control relatively large watersheds and are located such that the stability of the emergency spillway is essential to safeguard downstream features.

If the inflow is known (from the post-developed condition hydrology) and either the desired maximum water surface elevation, or the approximate width of the proposed emergency spillway (established by the embankment geometry and the adjacent topography), then the relationship between H_p, the depth of flow through the emergency spillway, and b, the emergency spillway bottom width, can be established using design Procedure 1 (**Chapter 5-8**) and **Table 5-12**.

If the required discharge capacity, Q, permissible velocity, V (see **Table 3.03-1**), degree of retardance, C (see **Table 3.03-2**), and the natural slope of the exit channel, s_o , are known, then the bottom width, b, of the level and exit sections and the depth of flow, H_p , may be computed using design Procedure 2 (**Chapter 5-8**) and **Table 5-13**.

Table 5-13(a-d) is not appropriate for bottom widths less than 8 feet.

The hydraulic design of a vegetated emergency spillway should comply with the following:

1. The maximum permissible velocity for vegetated spillways should be selected using **Table 3.03-1**.

2. The slope range of the exit channel provided in **Table 5-11**, **Chapter 5**, is a minimum slope range needed to insure ***supercritical*** flow in the exit channel.

3. Spillway side slopes should be no steeper than 3H:1V unless the spillway is excavated into rock.

4. For a given H_p , a decrease in the exit slope from s_o, as given in **Table 5-11** of **Chapter 5**, decreases the spillway discharge, but increasing the exit slope from s_o does not increase discharge.

5. The exit channel should have a straight alignment and grade and, at a minimum, the same cross-section as the control section.

6. The inlet channel should have a straight alignment and grade.

7. The selected bottom width of the spillway should not exceed 35 times the design depth of flow. Where this ratio of bottom width to depth is exceeded, the spillway is likely to be damaged by meandering flow and accumulated debris. Whenever the required bottom width of the spillway is excessive, consideration should be given to the use of a spillway at each end of the dam. The two spillways do not need to be of equal width if their total capacity meets design requirements. If the required discharge capacity exceeds the ranges shown in the referenced tables, or topographic conditions preclude the construction of the exit channel bottom using a slope that falls within the designated ranges, alternate design procedures should be used.

8. Vegetated emergency spillways should be designed for use with the 100-year frequency storm or greater.

Construction Specifications

Overall, widely acceptable construction standards and specifications for a vegetated emergency spillway on an embankment, such as those developed by the USDA Soil Conservation Service or the U. S. Army Corps of Engineers, should be followed. Further guidance can be found in the SCS Engineering Field Manual and the National Engineering Handbook. Specifications for all earthwork and any other related work should conform to the methods and procedures that apply to the site and the purpose of the structure. The specifications should also satisfy any requirements of the local government.

Installation of a vegetated emergency spillway consists of the following: a) *excavating the proper bottom width and side slopes according to the approved plan*, b) *backfilling with 12 inches of topsoil (minimum)*, and c) *stabilizing the area* following the VESCH, 1992 edition.

Maintenance and Inspection Guidelines

The following maintenance and inspection guidelines are recommendations. The engineer must decide if additional criteria are needed based upon the size and scope of the facility.

1. Vegetated emergency spillway channels should be mowed concurrently with the embankment and should not be cut to less than 6 to 8 inches in height.

2. The emergency spillway approach and discharge channels should be cleared of brush and other woody growth periodically.

3. After any flow has passed through the emergency spillway, the spillway crest (control section) and exit channel should be inspected for erosion. All eroded areas should be repaired and stabilized.

TABLE 3.03 - 1
Permissible Velocities for Vegetated Spillways [1]

Vegetative Cover	Permissible Velocity [2] *(ft/s)*			
	Erosion Resistant Soils [3]		Easily Erodible Soils [4]	
	Slope of Exit Channel		Slope of Exit Channel	
	0-5%	*5-10%*	*0-5%*	*5-10%*
Bermuda Grass Bahiagrass	8	7	6	5
Buffalograss Kentucky Bluegrass Smooth Bromegrass Tall Fescue Reed Canary Grass	7	6	5	4
Sod Forming Grass-Legume Mixtures	5	4	4	3
Lespedeza Weeping Lovegrass Yellow Bluestem Native Grass Mixtures	3.5	3.5	2.5	2.5

[1] SCS-TP-61
[2] Increase values 25 percent when the anticipated average use of the spillway is not more frequent than once in 10 years.
[3] Those with a high clay content and high plasticity. Typical soil textures are silty clay, sandy clay, and clay.
[4] Those with a high content of fine sand or silty and lower plasticity or non-plastic. Typical soil textures are fine sand, silt, sandy loam, and silty loam.

Source - USDA-SCS Engineering Field Manual

TABLE 3.03 - 2
Retardance Classifications for Vegetative Channel Linings

Retardance	Vegetative Cover	Stand	Condition
B	Tall Fescue	Good	Unmowed - 18"
	Sericea Lespedeza	Good	Unmowed - 18"
	Grass-Legume Mixture	Good	Unmowed - 20"
	Small Grains, Mature	Good	Uncut - 19"
	Bermuda Grass	Good	Tall - 12"
	Reed Canary Grass	Good	Mowed - 14"
C	Bermuda Grass	Good	Mowed - 6"
	Redtop	Good	Headed - 18"
	Grass-Legume Mixture - Summer	Good	Unmowed - 7"
	Kentucky Bluegrass	Good	Headed - 9"
	Small Grains, Mature	Poor	Uncut - 19"
	Tall Fescue	Good	Mowed - 6"
D	Bermuda Grass	Good	Mowed - 2.5"
	Red Fescue	Good	Headed - 15"
	Grass-Legume Mixture, Spring and Fall	Good	Unmowed - 5"
	Sericea Lespedeza	Good	Mowed - 2"

Source: USDA-SCS

REFERENCES

USDA Soil Conservation Service. Engineering Field Manual.

USDA Soil Conservation Service. National Engineering Handbook.

USDA Soil Conservation Service. Technical Release No. 60, Earth Dams and Reservoirs.

U. S. Department of the Interior. Design of Small Dams. 1987.

Virginia Department of Conservation and Recreation. Virginia Erosion and Sediment Control Handbook (VESCH) 1992 edition.

Chapter 3.03

Emergency Spillway "cut" into existing grade.

Emergency Spillway draining into concrete channel to protect embankment from erosion.

Vegetated Emergency Spillway

MINIMUM STANDARD 3.04

SEDIMENT FOREBAY

View BMP Images

LIST OF ILLUSTRATIONS

#	FIGURES	PAGE
3.04-1	Typical Sediment Forebay Plan and Section	3.04-4
3.04-2	Typical Sediment Forebay Sections	3.04-5

MINIMUM STANDARD 3.04

SEDIMENT FOREBAY

Definition

A sediment forebay is a settling basin or plunge pool constructed at the incoming discharge points of a stormwater BMP.

Purpose

The purpose of a sediment forebay is to allow sediment to settle from the incoming stormwater runoff before it is delivered to the balance of the BMP. A sediment forebay helps to isolate the sediment deposition in an accessible area, which facilitates BMP maintenance efforts.

Condition Where Practice Applies

A sediment forebay is an essential component of most impoundment and infiltration BMPs including retention, detention, extended-detention, constructed wetlands, and infiltration basins.

Planning Considerations

A sediment forebay should be located at each inflow point in the stormwater BMP. Storm drain piping or other conveyances may be aligned to discharge into one forebay or several, as appropriate for the particular site. Forebays should be installed in a location which is accessible by maintenance equipment.

Water Quality

A sediment forebay not only serves as a maintenance feature in a stormwater BMP, it also enhances the pollutant removal capabilities of the BMP. The volume and depth of the forebay work in concert with the outlet protection at the inflow points to dissipate the energy of incoming stormwater flows. This allows the heavier, course-grained sediments and particulate pollutants to settle out of the runoff. **Note that for the BMPs listed in this handbook, the target pollutant removal efficiencies have been established assuming sediment forebays are included in the design**. Therefore, no additional pollutant removal efficiency is warranted for using a sediment forebay.

Channel Erosion Control and Flood Control

An "on line" BMP designed for flood control and channel erosion control is subject to the natural bed material (sediment) load, plus any bed load increases due to higher velocities in the upstream channels. This is especially true for regional facilities where the upstream channel is used to convey the increased developed condition flows. In such cases, the sediment forebay becomes an essential facility maintenance component since it serves to simplify clean-out operations.

Studies indicate that a well-designed retention basin will function for 20 to 25 years before it needs dredging. This implies a gradual sediment accumulation process. A concern regarding stormwater basins is that the landowners will probably change at least once during that 20 to 25-year period. The new owners may not be aware of the maintenance requirements and, may therefore, neglect to maintain the facility. Sediment will then continue to accumulate and will eventually fill the BMP pool volume.

A sediment forebay, however, is designed to trap the sediments within a confined area. This causes a more rapid sediment accumulation. Studies indicate that for a typical mixed-use watershed, sediment removal from the forebay should occur every 3 to 5 years. Despite this frequency, removal of sediment from the forebay should be less costly over the same time period than a one time cleaning of the entire basin. This is due in part to the fact that removing sediment from the forebay is a much simpler operation than that of an entire stormwater basin or pond. The sediment is confined to strategic forebay locations with easy access. Furthermore, the more frequent and less expensive schedule will likely become a regular part of the operation and maintenance efforts of the owners.

Design Criteria

The most attractive aspect of a sediment forebay is its isolation from the rest of the facility. To create this separation, an earthen berm, or a gabion, concrete, or riprap wall can be constructed along the outlet side of the forebay. A designed overflow section should be constructed on the top of the separation to allow flow to exit the forebay at non-erosive velocities during the 2-year and 10-year

frequency design storms. The overflow section may be set at the permanent pool elevation or the extended-detention volume elevation. It may also be designed to serve as a spillover for the forebay if the forebay is set at a higher elevation than the second or remaining cell.

The use of an aquatic bench with emergent vegetation around the perimeter will help with water quality as well as provide a safety feature for large forebays (used on large lake BMPs or retrofits).

Volume

The sediment forebay should be sized to hold 0.25 inches of runoff per impervious acre of contributing drainage area, with an absolute minimum of 0.1 inches per impervious acre. The volume of the sediment forebay is not in addition to the required volume of the retention basin permanent pool, but rather as part of the required pool volume. For dry facilities, the forebay does not represent available storage volume if it remains full of water. A dry forebay must be carefully designed to avoid the resuspension of previously deposited sediments. The 0.1 to 0.25 impervious watershed inches is guidance for ideal performance. For smaller stormwater facilities, a more appropriate sizing criteria of 10% of the total required pool or detention volume may be more practical. This volume should be 4 to 6 feet deep to adequately dissipate turbulent inflow without resuspending previously deposited sediment (Center for Watershed Protection, 1995).

Maintenance

Direct access to the forebay should be provided to simplify maintenance. Provision of a hardened access or staging pad adjacent to the forebay is also beneficial. Such an area helps protect the forebay and basin from excessive erosion resulting from operation of the heavy equipment used for maintenance. The pad area can be hardened by installing block pavers or similar material. Also, a hardened bottom to the forebay will help avoid over excavation during clean out operations.

In addition, a fixed, vertical, sediment depth marker should be installed in each sediment forebay to measure the sediment deposition. The sediment depth marker will allow the owner to monitor the accumulation and anticipate maintenance needs. Clean out frequency will vary depending on the conditions of the upstream watershed and the given site.

In general, sediment should be removed from the forebay every 3 to 5 years, or when 6 to 12 inches have accumulated, whichever comes first. To clean the forebay, draining or pumping and a possible temporary partial drawdown of the pool area may be required. Refer to the VESCH, 1992 edition for proper dewatering methods.

To reduce costs associated with hauling and disposing of dredged material, a designated spoil area should be approved and identified on the site during initial design and development of the project.

FIGURE 3.04 - 1
Typical Sediment Forebay Plan and Section

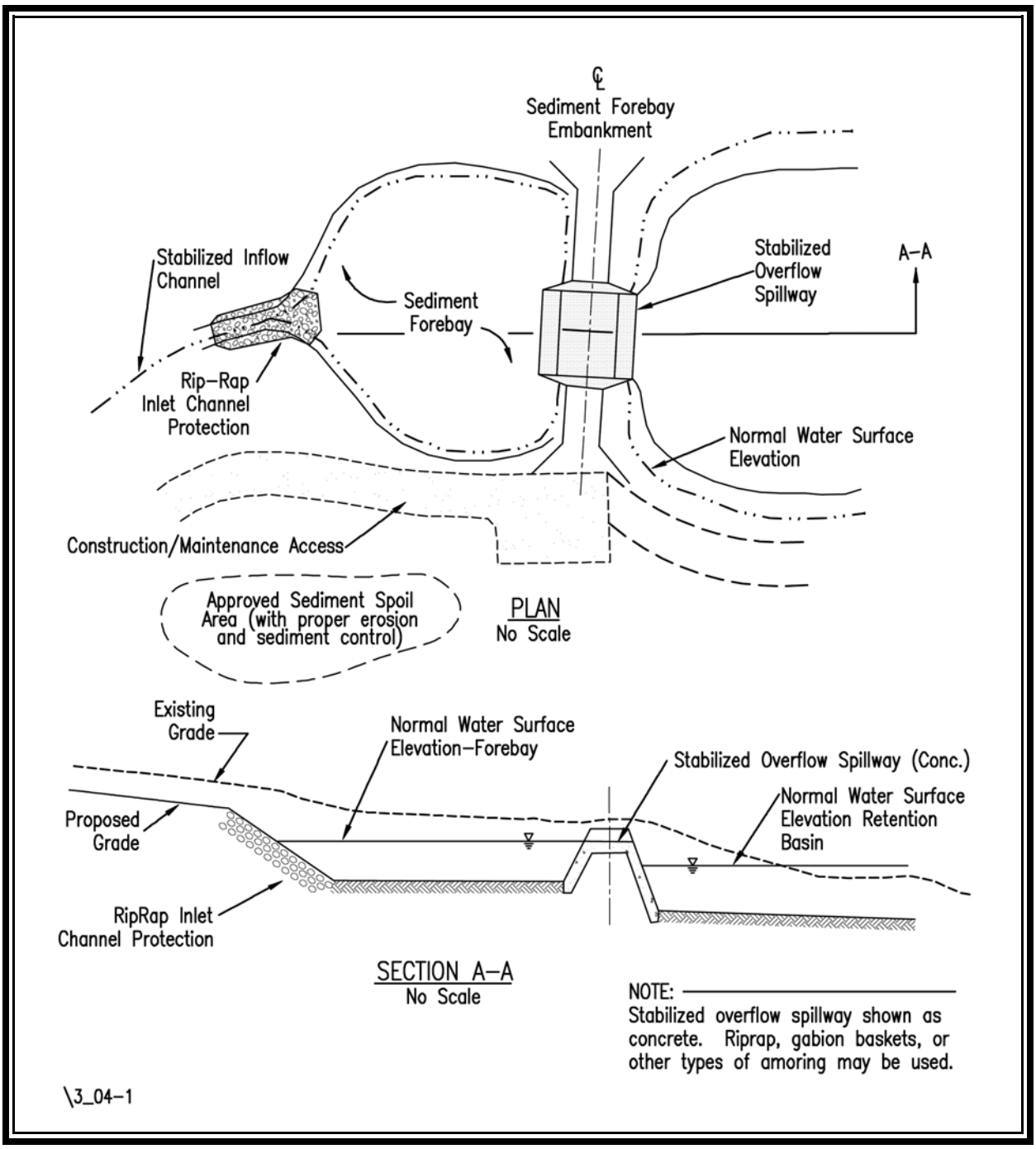

FIGURE 3.04 - 2
Typical Sediment Forebay Sections

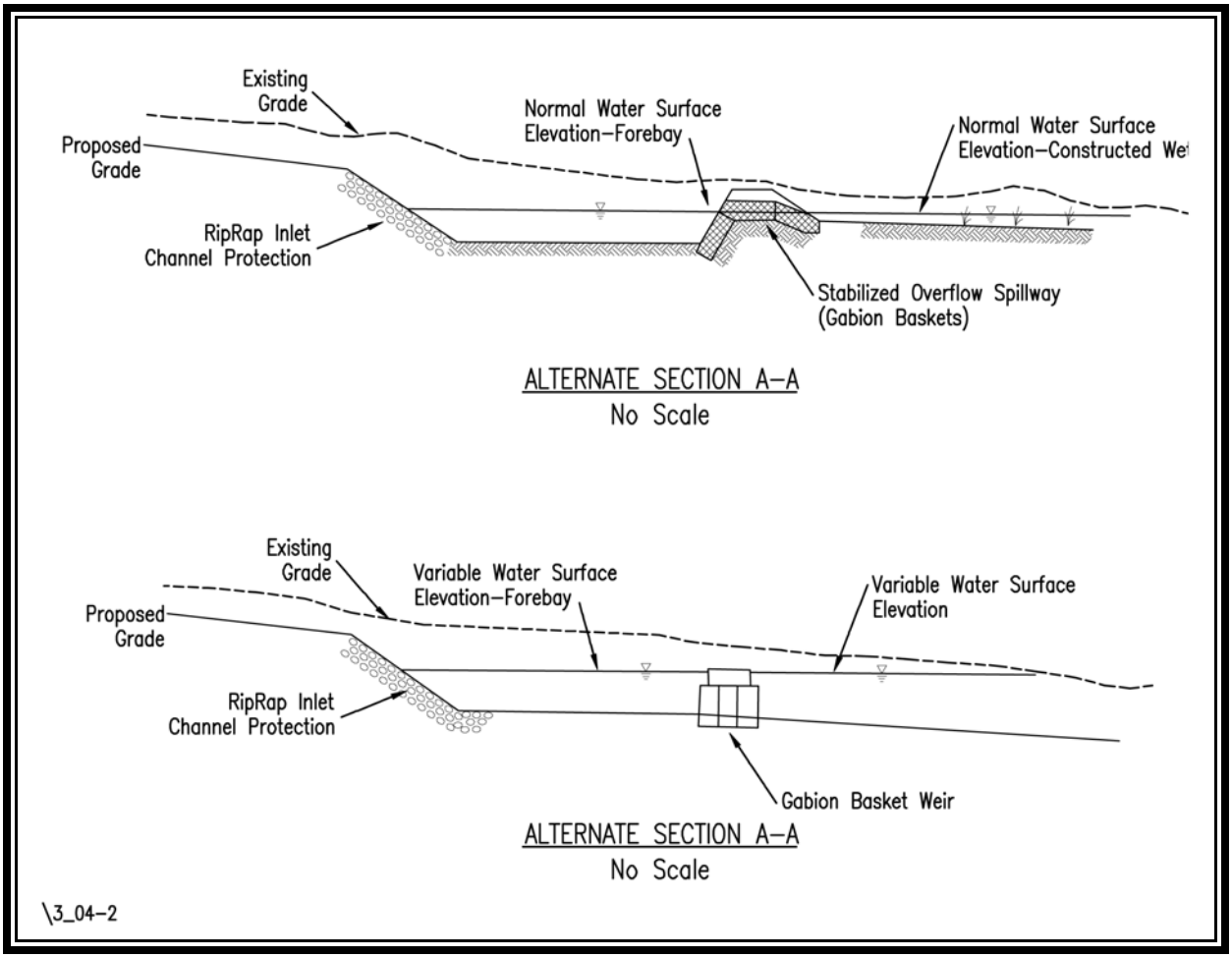

Sediment Forebay constructed with earthen embankment and rip-rap overflow.

Sediment Forebay constructed with submerged rip-rap weir.

Sediment Forebay

MINIMUM STANDARD 3.05

LANDSCAPING

View BMP Images

LIST OF ILLUSTRATIONS

#	FIGURES	PAGE
3.05-1	Planting Zones for Typical Stormwater BMPs	3.05-7
3.05-2	Virginia Physiographic Regions	3.05-8
3.05-3	USDA Plant Hardiness Zones	3.05-9
3.05-4	Native Plant Guide for Stormwater Management Areas in the Mid-Atlantic, USA	
	a. Trees and Shrubs	3.05-10
	b. Wetland Plants	3.05-13

MINIMUM STANDARD 3.05

LANDSCAPING

Definition

Landscaping is the placement of vegetation in and around stormwater management BMPs.

Purpose

The purpose of landscaping is to help stabilize disturbed areas, enhance the pollutant removal capabilities of a stormwater BMP and improve the overall aesthetics of a stormwater BMP.

Conditions Where Practice Applies

A landscape plan is an integral part of any land development project. It provides guidance and specifications for the type, location, and number of planting units according to the various requirements of the development project. A landscape plan may need one or all of the following:

1. Minimum green space or other requirements per local zoning or stabilization ordinances.

2. Natural and manmade vegetative buffer requirements between differing land uses or between developed land and natural resources.

3. Landscaping and stabilization requirements for stormwater management BMPs.

This minimum standard focuses on landscaping and stabilization requirements for stormwater management BMPs and their associated buffer areas. This standard may also be appropriate for other landscaping applications used in plan and specification preparation.

Certain BMPs, such as constructed wetlands, retention basins with an aquatic bench, *enhanced* extended detention basins with a shallow marsh, bioretention facilities, etc., require very specific plant materials and handling specifications. Refer to the minimum standards found in this chapter for additional criteria applicable to specific BMP designs.

Landscaped areas can provide significant reductions in pollutant export from developed sites through biological uptake of nutrients, sediment trapping, filtering, and infiltration.

For stormwater management purposes, landscaping is considered an integral component of a structural BMP. While the benefit realized from landscaping may be difficult to measure, it is widely accepted that the biological processes occurring in detention and retention BMPs are greatly enhanced by using vegetation. **The target pollutant removal efficiencies assigned to the BMPs in this handbook are based on the use of vegetative practices within the BMP buffer areas and the various BMP planting zones**. The vegetative practices should be specified in a landscape plan as part of the overall BMP and site construction documents.

Planning Considerations

Plant selection should be based on the planting zones within the BMP. Various zones exist within a stormwater impoundment and each represents a different inundation frequency and soil moisture condition. The planting zones can be classified as follows:

Zone 1: Deep Water Areas: This zone is submerged beneath 18 inches to 6 feet of water. It supports submerged aquatic vegetation such as pondweed, coontail, wild celery, etc., and floating vegetation such as duckweed. Plants can actively remove metals from the water and provide food and habitat for invertebrates at the bottom of the food cycle. This zone may be present in retention basins, constructed wetlands, and in sediment forebays and micro-pools of extended-detention and *enhanced* extended-detention basins.

Zone 2: Shallow Water Area: This zone is 0 to 18 inches in normal depth and is the primary area for the establishment of emergent wetland plants. It may be present in retention basins, constructed wetlands, and *enhanced* extended-detention basins. This zone is divided into **low-marsh** and **high-marsh** sub-zones. The low-marsh extends from 6 to 18 inches in depth below the normal water surface. The high-marsh ranges from 6 inches below the normal water surface and up to the normal water surface. Vegetation in this zone can serve the following purposes:

- enhances nutrient uptake,
- reduces flow velocities to increase the rate of sediment deposition,
- reduces resuspension of bottom sediments,
- provides food and cover for wildlife,
- provides habitat for predatory insects and to serve as a check for mosquitoes,
- reduces shoreline erosion, and
- improves aesthetics

Suggested plants for this zone include common three-square, soft-stem bulrush, pickerelweed, arrow arrum, sedges, and others.

Zone 3: Shoreline Fringe: This zone is regularly inundated during runoff-producing storm events and may remain saturated due to the proximity of the permanent pool. However, plants must be tolerant of periodic drying, especially during the summer months. This zone extends from the normal water surface to about 1 foot above the normal water surface for retention basins and constructed wetlands. It also continues up to the maximum extended-detention volume elevation for extended-detention and *enhanced* extended-detention basins. The vegetation in this zone may serve the following purposes:

- stabilizes the shoreline,
- improves aesthetics,
- limits shoreline access by people and animals (geese),
- provides food, cover, and nesting for wildlife, and
- provides shade

Recommended species for this zone include herbaceous vegetation such as soft-stem bulrush, pickerelweed, rice cutgrass, sedges, and others. It also includes trees such as black willow and river birch and shrubs such as chokeberry.

Zone 4: Riparian Fringe Area: This zone is only briefly inundated during storms. It generally includes the upper storage areas of extended-detention basins (above the water quality or channel erosion control volume) and the lower basin areas of dry detention basins. It experiences both wet and dry soil conditions and periodic inundation. The vegetation in this zone may serve the following purposes:

- reduce resuspension of newly deposited sediments,
- prevent erosion, and
- provide habitat and food for wildlife,

A variety of trees, shrubs, and ground covers can be used in this zone, including black willow, river birch, red chokeberry, green ash, sweetgum and others.

Zone 5: Floodplain Terrace: This zone experiences inundation only during large storms. It is generally between the 2-year and 100-year water surface elevations. Plant species native to floodplains usually grow well in this zone. Plants selected for the floodplain terrace should have the following traits:

- ability to provide erosion control on steep slopes,
- ability to survive periodic mowing,
- ability to withstand exposure and compacted soil, and
- require minimal maintenance

Zone 6: Upland Areas: This zone seldom, if ever, experiences inundation and may include any buffer areas required for stormwater basins. Selection of plant species in this zone typically depends on local soil conditions and the intended secondary uses of the area. Refer to **Table 3.05-4** for a plant guide.

Figure 3.05-1 shows a schematic cross-section of the six planting zones. Designers should select appropriate plant and tree species based on the characteristics of each zone, local soil conditions, sun and wind exposure levels, and intended secondary uses of the buffer area.

Preservation of Existing Vegetation

Although there are many reasons to minimize land disturbance associated with development, one of the greatest benefits may be the reduced runoff associated with undisturbed ground. Existing vegetation helps prevent erosion, filters runoff, and allows stormwater to filter into the ground, which ultimately results in lower stormwater management costs. As for the economics of site development, planning for the selective preservation of vegetation on a site **before land disturbance** is much less costly than trying to reestablish it once it has been removed. This holds true for both labor and replacement costs. In addition, studies conducted by the U.S. Forest Service and others indicate that preserving mature vegetation on residential sites can increase property values by 30% (NVPDC, 1996).

For guidance on non-structural BMPs and vegetative practices in general, refer to the following references:

- *Piedmont Provinces Vegetative Practices Guide, NVPDC, 1996.*
- *Nonstructural BMP Handbook: A Guide to Nonpoint Source Pollution Prevention Measures, NVPDC, 1996.*
- *Vegetative Practices Guide for Nonpoint Source Pollution Management, HRPDC, 1992.*
- *Chesapeake Bay Local Assistance Manual, CBLAD, 1989.*
- *Virginia Erosion & Sediment Control Handbook (VESCH), DCR, 1992.**

* The VESCH, 1992 edition, also provides details for tree preservation during construction.

Design Criteria

The landscape plan for a stormwater BMP depends on the BMP being used. However, there are key components to any landscape plan which help assure its overall success. The following section describes these components.

A landscape plan for a stormwater management BMP should contain the following, at a minimum:

Plant Species Selection

Plants selected for a stormwater BMP must tolerate urban stresses such as pollutants, along with variable soil moisture and ponding fluctuations, climate, soils, and topography. Virginia has three distinct physiographic regions that reflect changes in soils and topography: Coastal Plain, Piedmont, and Appalachian and Blue Ridge regions. See **Figure 3.05-2**.

When selecting plants, native plant species should be used, if possible. Nonnative plants may require more care to adapt to the hydrology, climate, exposure, soil and other conditions. Also, some nonnative plants can become invasive, especially those used for stabilization, and may ultimately choke out the native plant population.

Newly constructed stormwater BMPs will be fully exposed for several years before the buffer vegetation becomes adequately established. Therefore, plants which require full shade, are susceptible to winter kill, or are prone to wind damage, should be avoided.

The plant material should conform to the American Standard for Nursery Stock, current issue, as published by the American Association of Nurserymen. The botanical (scientific) name of the plant species should be in accordance with the landscape industry's standard nomenclature. All plant material specified should be suited for USDA Plant Hardiness zones 6 or 7. See **Figure 3.05- 3**.

Transport and Storage of Plant Material

Specifications may be required for the handling and storage of certain plant materials. Aquatic or emergent plants, for example, require very precise instructions for the contractor. Depending on the time of year and the sequence of construction, it may not be prudent to deliver the plants to the site until the project is ready for landscaping.

Sequence of Construction

The *sequence of construction* describes the site preparation activities such as grading, addition of soil amendments, and any preplanting requirements. It also addresses the installation of erosion and

sediment control measures, which should be in place until the entire landscape plan is implemented and the site is stabilized.

Installation of Plant Material

The success of any landscape plan depends on the selection of the proper specifications that are subsequently implemented by the contractor. The specifications should include procedures for installing the plants. They should also provide details for the steps to be taken before and after installation, such as any special instructions for the preparation of the planting pit and fertilization requirements. Any seasonal requirements for installation should also be specified. Typically, containerized or balled and burlapped trees or shrubs should be planted between March 15 and June 30, or between September 15 and November 15.

The placement of trees or shrubs on an embankment is prohibited. The root system of large trees and shrubs can threaten the structural integrity of the embankment and possibly cause its failure.

The side slopes of detention and retention BMPs are usually compacted during the construction process to ensure stability. The density of these compacted soils is often such that plant roots cannot penetrate to an adequate depth, leading to premature mortality or loss of vigor. Therefore, it is advisable to excavate oversized holes around the proposed planting sites and backfill with uncompacted topsoil. In general, planting holes should be 3 times deeper and wider than the diameter of the root ball (B&B stock) and 5 times deeper and wider for container-grown stock (MWCOG, 1992).

Contractor Responsibilities

The contractor should conform to any specifications that directly affect his aspect of the work. He should be aware that there may be penalties for unnecessarily delayed work, minimum success rate of plantings, etc.

For projects involving bio-retention basins or constructed wetlands, it may be advisable to utilize a subcontractor who specializes in aquatic landscaping. The plant specifications, handling, and installation procedures can be unusual compared to traditional landscaping requirements.

Maintenance

A maintenance schedule should be provided in the project plans and/or specifications. This is particularly important for BMPs that have a vegetative component that is integral to the pollutant removal efficiency. The schedule should include guidance regarding methods, frequency, and time of year for landscape maintenance and fertilization.

Specific plant communities may require different levels of maintenance. Upland and floodplain terrace areas, grown as meadows or forests, require very little maintenance, while aquatic or emergent vegetation may need periodic thinning or reinforcement plantings. Note that after the first growing season it should be obvious if reinforcement plantings are needed. If they are, they should be installed at the onset of the second growing season after construction.

Research indicates that for most aquatic plants the uptake of pollutants are stored in the roots, not the stems and leaves (Lepp 1981). Therefore, aquatic plants should not require harvesting before winter plant die-back. There are still many unanswered questions about the long term pollutant storage capacity of plants. It is possible that aquatic and emergent plant maintenance recommendations may be presented in the future.

FIGURE 3.05 - 1
Planting Zones for Typical Stormwater BMPS

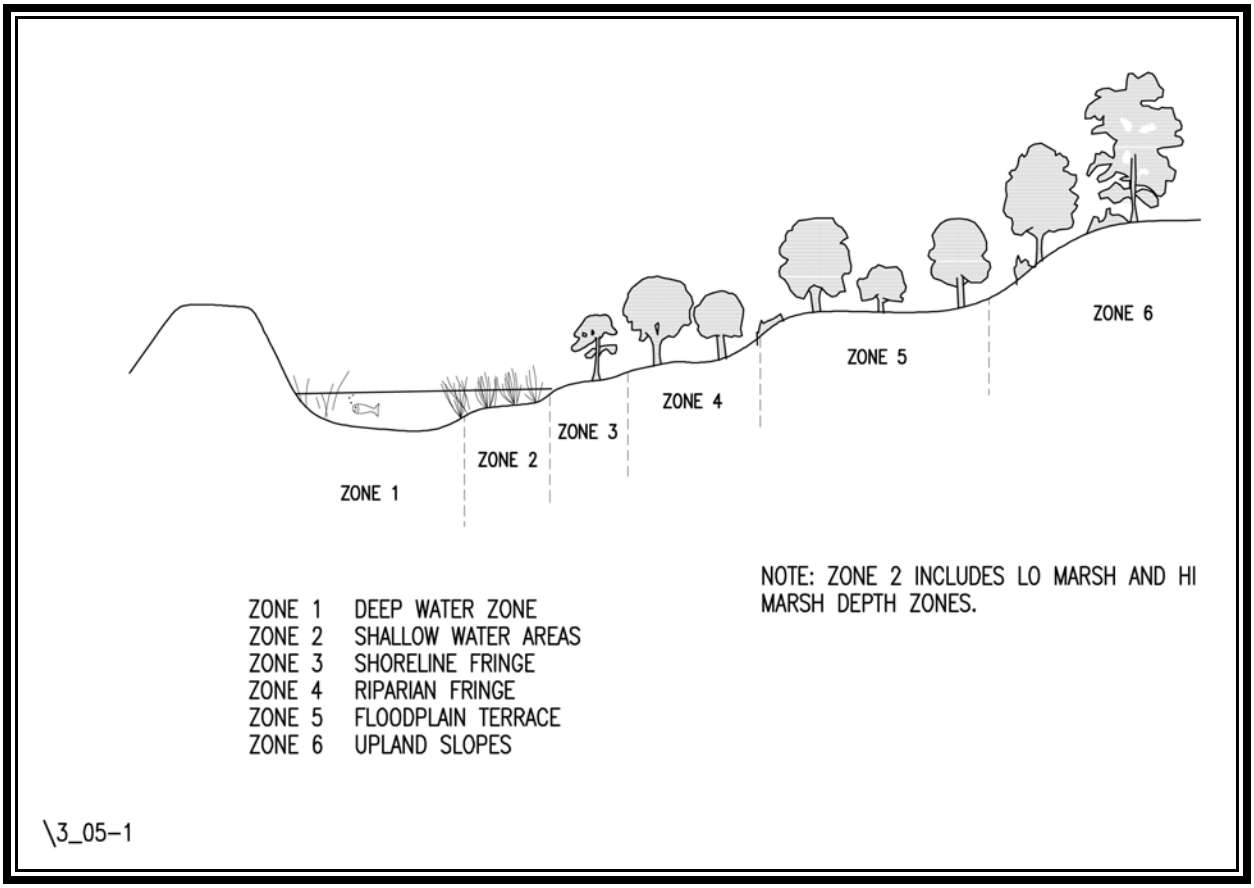

FIGURE 3.05 - 2
Virginia Physiographic Regions

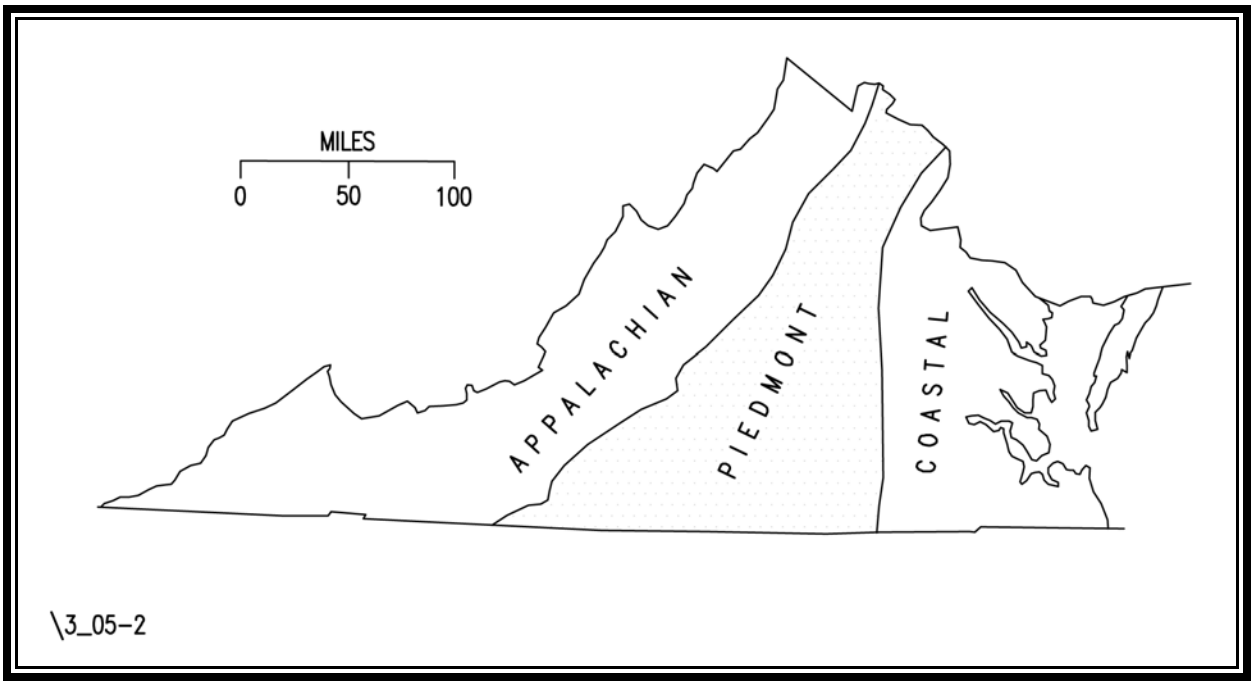

FIGURE 3.05 - 3
USDA Plant Hardiness Zones

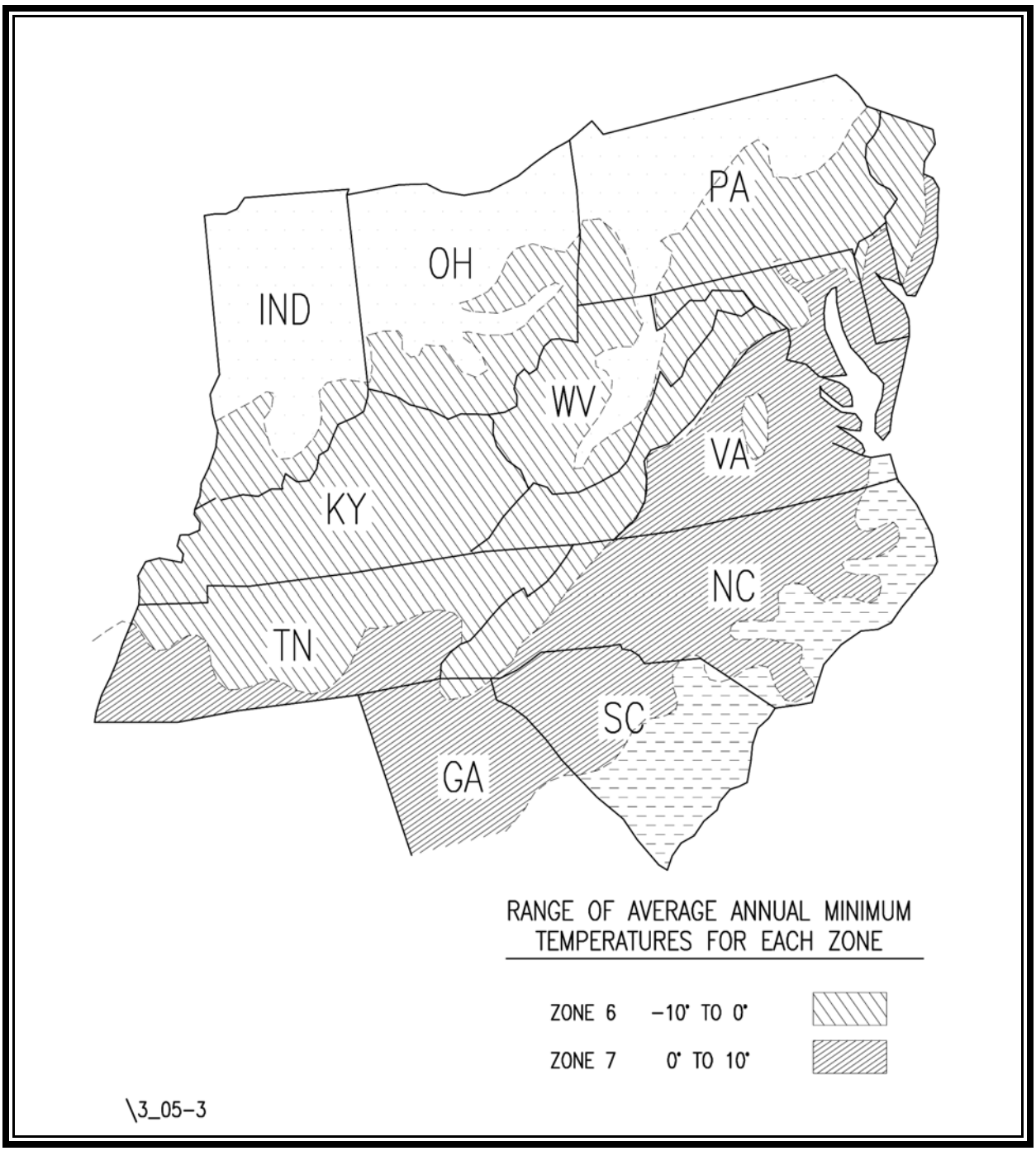

FIGURE 3.05 - 4a
Native Plant Guide for Stormwater Management Areas in the Mid-Atlantic, USA
Trees and Shrubs

Tree/Shrub	*Zone	Form	Available	Inundation Tolerance	Wildlife Value	Notes
American Beech *(Fagus grandifolia)*	5,6	Dec. Tree	no	no	High, mammals and birds.	Prefers shade and rich, well-drained soils.
American Holly *(Ilex opaca)*	5,6	Dec. Tree	yes	some	High,songbirds, food, cover, nesting.	Coastal plain only. Prefers shade and rich soils.
American Hornbeam *(Carpinus caroliniana)*	4,5	Dec. Tree	yes	yes	Moderate, food, browsing.	Most common in flood plains and bottom land of Piedmont and mountains.
Arrowwood Viburnum *(Viburnum dentatum)*	2,3,4	Dec. Shrub	yes	no	High, songbirds and mammals.	Grows best in sun to partial shade.
Bald Cypress *(Taxodium distichum)*	3,4	Dec. Tree	yes	yes	Little food value but good perching site for waterfowl.	Forested Coastal Plain wetlands. North of normal range. Tolerates drought.
Bayberry *(Myricia pensylvanica)*	4,5,6	Dec. Shrub	yes	no	High, nesting, food cover. Berries last into winter.	Coastal Plain only. Roots fix N. Tolerates slightly acidic soil.
Bitternut Hickory *(Carya cordiformis)*	3,4,5	Dec. Tree	no	yes	High, food.	Moist soils or wet bottom land areas.
Black Cherry *(Prunus serotina)*	5,6	Dec. Tree	yes	yes	High, fruit is eaten by many birds.	Temporarily flooded forested areas. Possible fungus infestation.
Black Walnut *(Juglans nigra)*	5,6	Dec. Tree	yes	yes	High, food.	Temporarily flooded wetlands along flood plains. Well drained, rich soils.
Blackgum or Sourgum *(Nyssa sylvatica)*	4,5,6	Dec. Tree	yes	yes	High, songbirds, egrets, herons, raccoons, owls.	Can be difficult to transplant. Prefers sun to partial shade.
Black Willow *(Salix nigra)*	3,4,5	Dec. Tree	yes	yes	High, browsing and cavity nesters.	Rapid growth, stabilizes stream banks. Full sun.
Buttonbush *(Cephalanthus occidentalis)*	2,3,4,5	Dec. Shrub	yes	yes	High, ducks and shorebirds. Seeds, nectar and nesting.	Full sun to partial shade. Will grow in dry areas.
Chestnut Oak *(Quercus prinus)*	5,6	Dec. Tree	no	no	High. Cover, browse and food.	Gypsy moth target. Dry soils.

FIGURE 3.05 - 4a (cont.)

Tree/Shrub	*Zone	Form	Available	Inundation Tolerance	Wildlife Value	Notes
Common Choke Cherry *(Prunus virginiana)*	5,6	Dec. Tree	no	some	High, birds, mammals. Fruit and cover.	Prefers drier conditions.
Common Spicebush *(Lindera benzoin)*	4,5	Dec. Shrub	yes	no	Very high, songbirds.	Shade and rich soils. Tolerates acidic soils. Good understory species.
Eastern Cottonwood *(Populus deltoides)*	4,5	Dec. Tree	yes	yes	Moderate, cover, food.	Shallow rooted, subject to windthrow. Invasive roots. Rapid growth.
Eastern Hemlock *(Tsuga conadensis)*	5,6	Conif. Tree	yes	yes	Moderate. Mostly cover and some food.	Tolerates all sun/shade conditions. Tolerates acidic soil.
Eastern Red Cedar *(Juniperus virginiana)*	4,5,6	Conif. Tree	yes	no	High. Fruit for birds. Some cover.	Full sun to partial shade. Common in wetlands, shrub bogs and edge of streams.
Elderberry *(Sambucus canadensis)*	4,5,6	Dec. Shrub	yes	yes	Extremely high for food and cover, for birds and mammals.	Full sun to partial shade.
Flowering Dogwood *(Cornus florida)*	4,5,6	Dec. Tree	no	yes	High, birds, food.	Prefers rich, moist soils. Dogwood anthracnose possible problem.
Fringe Tree *(Chionanthus viginicus)*	3,4,5	Dec. Shrub or small tree	yes	some	Moderate. Food and cover.	Full sun to partial shade. Tolerates acidic soil.
Green Ash, Red Ash *(Fraxinus pennysylvanica)*	4,5	Dec. Tree	yes	yes	Moderate, songbirds.	Rapid growing stream bank stabilizer. Full sun to partial shade.
Hackberry *(Celtis occidentalis)*	5,6	Dec. Tree	yes	yes	High, food and cover.	Full sun to partial shade.
Ironwood/ Hophornbeam *(Ostrya virginiana)*	5,6	Dec. Tree	yes	yes	Moderate, food and browse.	Tolerant of all sunlight conditions.
Larch, Tamarack *(Larix laricina)*	3,4	Conif. Tree	no	yes	Low, nest tree and seeds.	Rapid initial growth. Full sun, acidic boggy soils.
Loblolly Pine *(Pinus taeda)*	5,6	Conif. Tree	yes	yes	Moderate, food, nesting, squirrels.	Coastal Plain only. Tolerant of extreme soil conditions.

FIGURE 3.05 - 4a (cont.)

Tree/Shrub	*Zone	Form	Available	Inundation Tolerance	Wildlife Value	Notes
Mountain Laurel *(Kalmia latifolia)*	6	Evergreen	no	some	Low, cover, and nectar. Foliage is toxic to cattle and deer.	Partial shade, acidic soils.
Persimmon *(Diospyros virginiana)*	4,5,6	Dec. Tree	yes	no	Extremely high, birds, mammals.	Not shade tolerant. Well-drained soils.
Pin Oak *(Quercus palustris)*	4,5,6	Dec. Tree	yes	yes	High, mast. Tolerates acidic soil.	Gypsy moth target. Prefers sun to partial shade.
Red Chokeberry *(Pyrus arbutifolia)*	3,4,5	Dec. Shrub	no	yes	Moderate, songbirds.	Bank stabilizer. Partial sun.
Red Maple *(Acer rubrum)*	4,5,6	Dec. Tree	yes	yes	High, seeds and browse. Tolerates acidic soil.	Rapid growth.
Red Oak *(Quercus rubra)*	5,6	Dec. Tree	yes	no	High, food and cover.	Gypsy moth target. Prefers well drained, sandy soils.
River Birch *(Betula nigra)*	3,4	Dec. Tree	yes	yes	Low, but good for cavity nesters.	Bank erosion control. Full sun.
Scarlet Oak *(Quercus coccinea)*	3,4	Dec. Tree	no	no	High, food and cover.	Gypsy moth target. Difficult to transplant.
Shadbush, Serviceberry *(Amelanchier canadensis)*	5,6	Dec. Tree	yes	yes	High, nesting, cover and food. Birds and mammals.	Prefers partial shade. Common in forested wetlands and upland woods.
Silky Dogwood *(Cornus amomum)*	5,6	Dec. Shrub	yes	yes	High, songbirds, mammals.	Shade and drought tolerant. Good bank stabilizer.

Source: Native Plant Pondscaping Guide - Watershed Restoration Sourcebook, Natalie Karouna, MWCOG

****Zone 1:** Submergent Aquatic Vegetation*
****Zone 2:** Shallow Water Bench - 6-12 inches Deep*
****Zone 3:** Shoreline Fringe - Regularly Inundated Area*
****Zone 4:** Riparian Fringe - Periodically Inundated Area, Wet Soils*
****Zone 5:** Floodplain Terrace - Infrequently Inundated, Moist Soils*
****Zone 6:** Upland Slopes - Seldom or Never Inundated, Moist To Dry Soils*

FIGURE 3.05 - 4b
Native Plant Guide for Stormwater Management Areas in the Mid-Atlantic, USA
Wetland Plants

Wetland Plants	*Zone	Form	Available	Inundation Tolerance	Wildlife Value	Notes
Arrow arum *(Peltandra virginica)*	2	Emergent	yes	up to 1 ft.	High, berries are eaten by wood ducks.	Full sun to partial shade.
Arrowhead/Duck potato *(Saggitaria latifolia)*	2	Emergent	yes	up to 1 ft.	Moderate, tubers and seeds eaten by ducks.	Aggressive colonizer.
Broomsedge *(Andropogon virginianus)*	2,3	Perimeter	yes	up to 3 in.	High, songbirds and browsers. Winter food and cover.	Tolerant of fluctuating water levels and partial shade.
Cattail *(Typha spp.)*	2,3	Emergent	yes	up to 1 ft.	Low, except as cover.	Aggressive. May eliminate other species. Volunteer. High pollutant treatment.
Coontail *(Ceratophyllum demersum)*	1	Submergent	no	yes	Low, food, good habitat and shelter for fish and invertebrates.	Free floating SAV. Shade tolerant. Rapid growth.
Common Three Square *(Scipus pungens)*	2	Emergent	yes	up to 6 in.	High, seeds, cover, waterfowl, songbirds.	Fast colonizer. Can tolerate periods of dryness. Full sun. High metal removal.
Duckweed *(Lemna sp.)*	1,2	Submergent /Emergent	yes	yes	High, food for waterfowl and fish.	May biomagnify metals beyond concentrations found in water.
Lizard's Tail *(Saururus cernuus)*	2	Emergent	yes	up to 1 ft.	Low, except wood ducks.	Rapid growth. Shade tolerant.
Marsh Hibiscus *(Hibiscus moscheutos)*	2,3	Emergent	yes	up to 3 in.	Low, nectar.	Full sun. Can tolerate periodic dryness.
Pickerelweed *(Pontederia cordata)*	2,3	Emergent	yes	up to 1 ft.	Moderate, ducks, nectar for butterflies.	Full sun to partial shade.
Pond Weed *(Potamogeton pectinatus)*	1	Submergent	yes	yes	Extremely high, waterfowl, marsh and shore-birds.	Removes heavy metals.
Rice Cutgrass *(Leersia oryzoides)*	2,3	Emergent	yes	up to 3 in.	High, food and cover.	Full sun, although tolerant of shade. Shoreline stabilization.

FIGURE 3.05 - 4b (cont.)

Wetland Plants	*Zone	Form	Available	Inundation Tolerance	Wildlife Value	Notes
Sedges *(Carex spp.)*	2,3	Emergent	yes	up to 3 in.	High, waterfowl, songbirds.	Many wetland and several upland species.
Soft-stem Bulrush *(Scipus validus)*	2,3	Emergent	yes	up to 1 ft.	Moderate, good cover and food.	Full sun. Aggressive colonizer. High pollutant removal.
Smartweed (Polygonum spp.)	2	Emergent	yes	up to 1 ft.	High, waterfowl, songbirds, seeds and cover.	Fast colonizer. Avoid weedy aliens such as P. Perfoliatum.
Spatterdock (Nuphar luteum)	2	Emergent	yes	up to 1.5 ft.	Moderate, for food but high for cover.	Fast colonizer. Tolerant of fluctuating water levels.
Switchgrass *(Panicum virgatum)*	2,3,4, 5,6	Perimeter	yes	up to 3 in.	High, seeds, cover. Waterfowl, songbirds.	Tolerates wet/dry conditions.
Sweet Flag *(Acorus calamus)*	2,3	Perimeter	yes	up to 3 in.	Low, tolerant of dry periods.	Tolerates acidic conditions. Not a rapid colonizer.
Waterweed *(Elodea canadensis)*	1	Submergent	yes	yes	Low.	Good water oxygenator. High nutrient, copper, manganese and chromium removal.
Wild Celery *(Valisneria americana)*	1	Submergent	yes	yes	High, food for waterfowl. Habitat for fish and invertebrates.	Tolerant of murkey water and high nutrient loads.
Wild Rice *(Zizania aquatica)*	2	Emergent	yes	up to 1 ft.	High, food. Birds.	Prefers full sun.

Source: Native Plant Pondscaping Guide - Watershed Restoration Sourcebook, Natalie Karouna, MWCOG

****Zone 1:Submergent Aquatic Vegetation***
****Zone 2:Shallow Water Bench - 6-12 inches Deep***
****Zone 3:Shoreline Fringe - Regularly Inundated Area***
****Zone 4:Riparian Fringe - Periodically Inundated Area, Wet Soils***
****Zone 5:Floodplain Terrace - Infrequently Inundated, Moist Soils***
****Zone 6:Upland Slopes - Seldom or Never Inundated, Moist To Dry Soils***

REFERENCES

Arnold, J.A., ed., D.E. Line, S.W. Coffey, and J. Spooner. Stormwater Management Guidance Manual. Raleigh, North Carolina: North Carolina Cooperative Extension Service and North Carolina Division of Environmental Management, 1993.

Brady, N.C. The Nature and Properties of Soils. New York: MacMillan Publishing Co., 1984.

Chesapeake Bay Local Assistance Department. Chesapeake Bay Local Assistance Manual. Richmond, Virginia: 1989.

Chesapeake Bay Program. Water Quality Functions of Riparian Forest Buffer Systems in the Chesapeake Bay Watershed. Technology Transfer Report CBP/TRS 134/95. Annapolis, Maryland: 1995.

Dillaha, T.A., R.B. Reneau, S. Mostaghimi, and D. Lee. "Vegetative Filter Strips for Agricultural Nonpoint Source Pollution Control." Transactions of the American Society of Agricultural Engineers. Blacksburg, Virginia: 1989.

Fernald, M. L. Gray's Manual of Botany. 8th ed. Portland, Oregon: Dioscorides Press, 1950.

Galli, John. Analysis of Urban BMP Performance and Longevity. Washington, D. C.: Metropolitan Washington Council of Governments, 1992.

Hampton Roads Planning District Commission. Vegetative Practices Guide for Nonpoint Source Pollution Management. Chesapeake, Virginia: 1992.

Hightshoe, G. L. Native Trees, Shrubs, and Vines for Urban and Rural America. New York: Van Nostrand Reinhold, 1988.

Karouna, Natalie. Native Plant Pondscaping Guide. Anacostia Watershed Restoration Source Book. Washington, D. C.: Metropolitan Washington Council of Governments, 1991.

Metropolitan Washington Council of Governments. Guidance Report 1: Riparian Buffer Programs, A Guide to Developing and Implementing a Riparian Buffer Program as an Urban Stormwater Best Management Practice. Washington, District of Columbia: 1993.

Northern Virginia Planning District Commission and Engineers and Surveyors Institute. Northern Virginia BMP Handbook. Annandale, Virginia: 1992.

Reed, P. B., Jr. National List of Species That Occur in Wetlands: Northeast. St. Petersburg, Florida: United States Fish and Wildlife Service, 1988.

Schlesinger, W. H. and Waring, R. H. Forest Ecosystems: Concepts and Management. Orlando, Florida: Academic Press, 1985.

Schueler, T. Controlling Urban Runoff: A Practical Manual for Planning and Designing Urban BMPs. Washington, D. C.: Metropolitan Washington Council of Governments, 1987.

Schueler, T. Level Spreader/Filter Strip System Assessed in Virginia. Watershed Protection Techniques, Vol. 1, No. 1. Silver Spring, Maryland: Center for Watershed Protection, 1994.

Schueler, T.R., P.A. Kumble, and M.A. Heraty. A Current Assessment of Urban Best Management Practices. Washington, D.C.: Metropolitan Washington Council of Governments, 1992.

Schueler, T. The Architecture of Urban Stream Buffers. Watershed Protection Techniques, Vol. 1, No. 4. Silver Spring, Maryland: Center for Watershed Protection, 1995.

Tisdale, S. L. and Nelson, W. L. Soil Fertility and Fertilizers. 3rd. ed. New York: MacMillan Publishing Co., Inc., 1975.

Virginia Department of Forestry. Interim Report to the Chesapeake Bay Executive Council, EC Directive #94-1 Riparian Forest Buffers. Charlottesville, Virginia: 1995.

Virginia Department of Conservation and Recreation. Virginia Erosion and Sediment Control Handbook (VESCH). Richmond, Virginia: 1992.

Wong, S.L. and R.H. McCuen. The Design of Vegetative Buffer Strips for Runoff and Sediment Control. Tidewater Administration, Maryland Department of Natural Resources, Annapolis, Maryland: 1982.

Landscaping – "rough" shoreline edge and aquatic bench provides improved pollutant removal and shoreline stabilization.

Landscaping – "manicured" landscape plan. Note brick bulkhead to control shoreline erosion.

Landscaping

MINIMUM STANDARD 3.06

RETENTION BASIN

View BMP Images

LIST OF ILLUSTRATIONS

FIGURE #	FIGURES	PAGE
3.06-1	Retention Basin - Plan & Section	3.06-2
3.06-2	Varying Depth of Permanent Pool	3.06-14
3.06-3	Short-Circuiting	3.06-15
3.06-4	Typical Retention Basin Control Structure	3.06-16
3.06-5	Typical Retention Basin Aquatic Bench - Section	3.06-19

TABLE #	TABLES	PAGE
3.06-1	Pollutant Removal Efficiencies for Retention Basins	3.06-3
3.06-2	Recommended Surface Area - Pool Depth Relationships for Retention Basins	3.06-12
3.06-3	Clay Liner Specifications	3.06-18

MINIMUM STANDARD 3.06

RETENTION BASIN

Definition

A retention basin is a stormwater facility which includes a permanent impoundment, or pool of water, and, therefore, is normally wet, even during non-rainfall periods. Inflows from stormwater runoff may be temporarily stored above this permanent pool.

Purpose

A retention basin provides for long-term water quality enhancement of stormwater runoff. Stormwater inflows may also be temporarily stored above the permanent pool for downstream flood control and channel erosion control. A retention basin is considered one of the most reliable and versatile BMPs available.

Water Quality Enhancement

High removal rates of particulate and soluble pollutants (nutrients) can be achieved in retention basins through *gravitational settling*, *biological uptake* and *decomposition*. When an even higher degree of pollutant removal efficiency is required, the basin can be ***enhanced*** by using various modifications relating to the size and design of the permanent pool.

Monitoring studies have shown sediment removal efficiencies to range from 50-90%, total phosphorus removal efficiencies to range from 30-90% and soluble nutrient removal efficiencies to range from 40-80%. (MWCOG, 1992). The design elements, physical characteristics, and monitoring techniques varied for each basin studied, which explains the wide range of efficiencies. The target pollutant removal efficiencies assigned to the different design options are presented in **Table 3.06-1**.

FIGURE 3.06 - 1
Retention Basin - Plan & Section

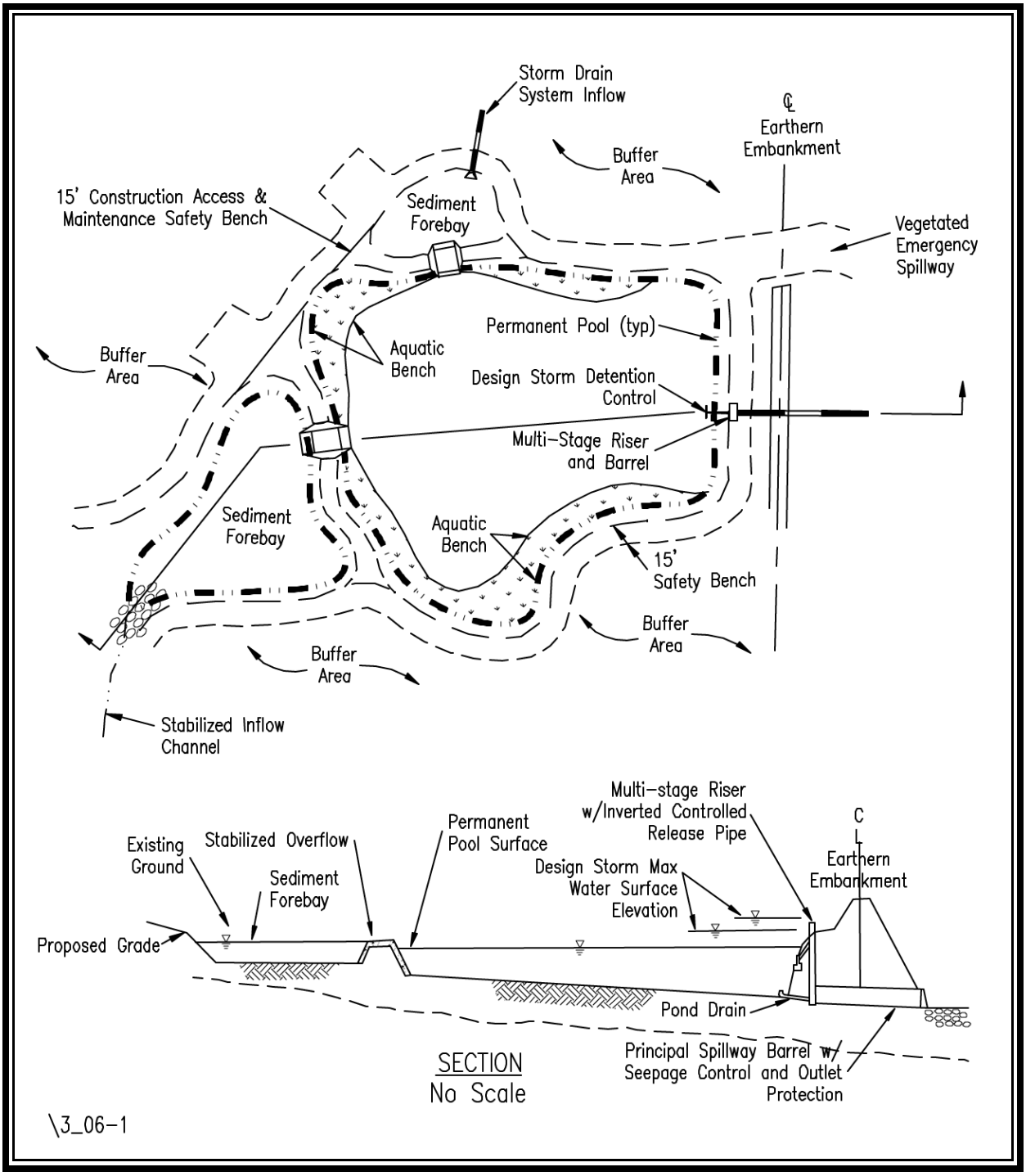

TABLE 3.06 - 1
Pollutant Removal Efficiencies for Retention Basins

Type	Sizing Rule	Target Phosphorus Removal Efficiency	Impervious Cover
Retention Basin I	3.0 x WQ Volume	40%	22-37%
Retention Basin II	4.0 x WQ Volume	50%	38-66%
Retention Basin III	4.0 x WQ Volume with Aquatic Bench	65%	67-100%

Flood Control

Retention basins which provide flood control are designed with "dry" storage above the permanent pool. This dry storage works in concert with a riser or control structure to reduce the peak rate of runoff from a drainage area. Typically, the design storms selected for flood control (i.e., 2-year, 10-year frequency, etc.) are specified by state and local ordinances, or are based on specific watershed conditions. In either case, the required volume to be stored above the permanent pool can be readily determined using the hydrologic methods discussed in **Chapter 4**. Similarly, a control or spillway structure can be designed using the engineering calculation procedures presented in **Chapter 5**.

Channel Erosion Control

The storage volume above the permanent pool can also be used to control or reduce channel erosion. Channel erosion protection can be accomplished by reducing the peak rate of discharge, similar to flood control, or by controlling the time over which the peak volume of discharge is released (extended detention), similar to water quality enhancement. **Chapter 5-11** provides a discussion on the design criteria for channel erosion control.

Conditions Where Practice Applies

Drainage Area

A contributing watershed of at least 10 acres and/or a good source of baseflow should be present for a retention basin to be feasible. Even with 10 acres of contributing watershed, the permanent pool may be susceptible to dry weather drawdowns due to infiltration and evaporation.

(Refer to **Chapter 5, Appendix 5C** for water balance calculation procedures.) Dry weather stagnation may result in aesthetic and odor problems for adjacent property owners. Therefore, for residential or high visibility applications, a minimum of 15 to 20 acres of contributing watershed may be more appropriate. Infiltration basins, trenches or extended-detention basins are more suitable for smaller sites.

A retention basin is recommended for use as a regional or watershed-wide stormwater management facility since its cost per acre treated is inversely proportional to the watershed size. Studies confirm that the most cost-effective application of a retention basin is on larger, more intensely developed sites (Schueler, et. al., 1985).

Note that excavated retention basins in areas of high groundwater, such as in Tidewater, Virginia, may be feasible with very small drainage areas. The groundwater elevation should be carefully monitored, however, to verify the design permanent pool elevation.

Development Conditions

Retention basins have the potential for removing high levels of soluble and particulate pollutants which makes them suitable for most types of development. They are appropriate for both high- and low- visibility sites. However, for high-visibility sites, care must be taken to avoid the aesthetic problems associated with stagnation or excessive infiltration of the permanent pool. Maintenance of the permanent pool is not necessarily critical to the retention basin's ability to remove pollutants, but maintenance **is critical** to ensure the BMP's acceptance by adjacent landowners. If adequate space is available, retention basins may also be used for both high and low density residential or commercial developments.

.

A minimum 20-foot wide vegetated buffer should be provided around a retention basin to help filter out pollutants before they enter the basin. This requirement results in the need for more land, especially for those basins that may already be oversized to enhance their pollutant removal capabilities. It is for this reason that the use of large retention basins may not be a feasible option in developing watersheds where land is at a premium. This strengthens the argument for a regional or watershed approach to stormwater management. A regional retention or extended-detention basin is not only more cost-effective, it is also more likely to be installed on land that is not suitable for development. (It should be noted, however, that the environmental impacts and appropriate permits must still be considered for such an application.)

Planning Considerations

The success of a retention basin is dependent on the designer's ability to identify any site or downstream conditions that may affect the design and function of the basin. Above all, the facility should be compatible with both upstream and downstream stormwater systems, thus promoting a *watershed approach* in providing stormwater management.

Site Conditions

Existing site conditions should be considered in the design and location of a retention basin. Features such as topography, wetlands, structures, utilities, property lines, easements, etc., may impose constraints on the location or construction of the basin. Local government land use and zoning ordinances may also designate certain requirements.

All retention basins should be a minimum of 20 feet from any structure or property line (as required by local ordinances), and 100 feet from any septic tank/drainfield. (The designer should be aware that an impoundment of water may elevate the local water table which could adversely effect drainfields and structures.) Retention basins should be a minimum of 50 feet from any steep slope (greater than 15%). Alternatively, a geotechnical report must address the potential impact of any retention basin that is to be constructed on or near such a slope.

Additional considerations are as follows:

1. **Soils –**

In the past, many designs were accepted based upon soils information compiled from available data, such as SCS soil surveys. While such a source may be appropriate for a pre-engineering feasibility study, final design and acceptance **should be based on an actual subsurface analysis and a permeability test**, accompanied by appropriate engineering recommenda- tions. The references listed at the end of this standard and at the end of **Minimum Standard 3.10, Infiltration Practices** provide more detailed information regarding the feasibility analysis of subsurface conditions for various soil types. Due to its complexity, this topic is not covered here. Note that the geotechnical study required for the embankment design (reference **Minimum Standard 3.01, Earthen Embankment**) will often provide adequate data to verify the soil's suitability for a retention basin.

The goal of a subsurface analysis is to determine if the soils are suitable for a retention basin. The textural character of the soil horizons and/or strata units within the subsoil profile should be identified to at least 3 feet below the facility bottom. This information is used to verify the infiltration rate or permeability of the soil. For a retention basin, water inflow (base flow and groundwater) must be greater than water losses (infiltration and evaporation). If the infiltration rate of the soil is too high, then a retention basin may not be an appropriate BMP.

Permeable soils are not suited for retention basins. The depth of the permanent pool can influence the rate at which water will infiltrate through the existing soil. The soil permeability may be such

that the basin can support a shallow marsh or constructed wetland. However, as the depth of the permanent pool increases, the increased head or pressure on the soil may increase the infiltration rate. If necessary, a liner of clay, geosynthetic fabric, or other suitable material may be used in the basin (as specified by a geotechnical engineer). Refer to the design criteria for basin liners.

2. **Rock –**

A subsurface investigation should also identify the presence of rock or bedrock. Excavation of rock may be too expensive or difficult with conventional earth moving equipment, precluding the use of a basin. Blasting the rock for removal may be possible, but blasting may open seams or create cracks in the underlying rock, resulting in an unwanted drawdown of the permanent pool. Blasting of rock is not recommended unless a liner, as described above, is installed.

3. **Karst –**

In regions where Karst topography is prevalent, projects may require thorough soils investigations and specialized design and construction techniques. The presence of karst should be determined **during the planning phase of the project** since it may affect BMP selection, design, and cost.

4. **Existing Utilities–**

Most utility companies will not allow a permanent or temporary pool to be installed over their underground utility lines or right-of-ways. However, if such a site must be used, the designer should obtain permission from the utility company **before designing** the basin. The relocation of any existing utilities should be researched and the costs included in the overall basin cost estimate.

Environmental Impacts

1. **Wetlands –**

Large facilities and/or regional facilities naturally lend themselves to being placed in low lying, and usually environmentally sensitive, areas. Such locations often contain wetlands, shallow marshes, perennial streams, wildlife habitat, etc., and may be protected by state or federal laws. The owner or designer should investigate regional wetland maps and contact appropriate local, state, and federal agencies to verify the presence of wetlands, their protected status, and suitability for a retention basin at the location in question.

With careful planning, it may be possible to incorporate wetland mitigation into a retention basin design. This assumes that the functional value of the existing or impacted wetland can be identified and included, reconstructed, or mitigated for, in the basin. The Virginia Department of Environmental Quality should be contacted for more information regarding wetland mitigation.

2. **Downstream Impacts –**

A retention basin may have an adverse impact on downstream water quality by altering the biological oxygen demand (BOD), dissolved oxygen (DO), temperature, etc., of the water body. This is of special concern in cold water trout streams. The release depth of the control structure, overall pond depth, hydraulic residence time, and other design features can be manipulated to help meet the site specific needs of the downstream channel.

Urban detention and retention basin design should be coordinated with a watershed or regional plan for managing stormwater runoff, if available. In a localized situation, an individual basin can provide effective stream protection for the downstream property if no other areas contribute runoff in a detrimental way to that property. However, an uncontrolled increase in the number of impoundments within a watershed can severely alter natural flow conditions, causing combined flow peaks or increased flow duration. This can ultimately lead to downstream flooding and degradation.

3. **Upstream Impacts –**

The upstream channel must also be considered, especially when the retention basin is to be used to control downstream channel erosion. Erosive upstream flows will not only degrade the upstream channel, but will also significantly increase the maintenance requirements in the basin by depositing large amounts of sediment eroded from the channel bottom.

Water Quality Enhancement

A retention basin is typically selected for its water quality enhancement abilities and/or aesthetic value. The flexibility of providing for additional control components (channel erosion control, flood control, habitat, etc.) increases their value. The permanent pool of a retention basin serves to enhance the quality of the stormwater within it. Studies show that providing a larger permanent pool, and/or adding modifications such as an aquatic bench, sediment forebay, etc., will provide greater and more consistent pollutant removal benefits (refer to the **Design Criteria** section in this standard). Currently, no credit is given for any additional pollutant removal efficiency that may occur with an extended-detention volume stacked on top of the permanent pool of a retention basin. However, significant improvements in channel erosion control have been reported using extended-detention for the 1-year frequency design storm (Galli, MWCOG, 1992). Refer to **Minimum Standard 3.07, Extended Detention Basins**.

A concern in specifying a retention basin is how much land it will occupy. The size of the permanent pool will be based on the desired pollutant removal efficiency. The “dry” storage volume above the permanent pool will be sized for downstream channel erosion and/or flood control. The size of these two components together will determine the size of the basin.

Preliminary sizing estimates for the permanent pool and "dry" storage volume are recommended during the planning stages to evaluate the feasibility of using a retention basin.

If a retention basin is used to remove pollutants, the water quality within the basin will be lowered, thus possibly reducing its desirability for water supply, recreation, and aesthetic purposes. Therefore, the engineer should be aware of the site's specific runoff components and understand their possible effects on the quality of the stored water. Runoff from highways and streets can be expected to carry significant concentrations of heavy metals such as lead, zinc, and copper. These and other heavy metals may accumulate in the bottom of a facility, creating a potential health and environmental hazard. If a basin is in a watershed where a significant portion of the runoff is from highways, streets or parking areas, then access to the facility should be limited and warning signs should be posted. Proper disposal of the bottom sediments from these basins may require that they be hauled to an approved facility.

Further, retention basins in residential areas are subject to nutrients from lawn fertilizers and other urban sources. Excess nutrients can lead to algae and other undesirable vegetation which can diminish the aesthetic and recreational value of the basin.

Flooding and Channel Erosion Control

Flood control and downstream channel erosion are managed by providing additional storage volume, referred to as dry storage, above the permanent pool, and properly sizing a discharge opening in the riser structure.

When a retention basin is designed for channel erosion control and/or flood control, but **not** water quality enhancement, the permanent pool volume should be sized to address maintenance, aesthetic, and feasibility concerns (adequate drainage area, etc.).

Sediment Control

A stormwater retention basin may initially serve as a sediment control basin during the project's construction. A sediment basin is designed for the maximum drainage area expected to contribute to the basin during the construction process, while a permanent stormwater basin is designed based on post-developed land use conditions. When designing a facility to do both, the basin should be sized using the most stringent criteria, sediment control or stormwater management, which will result in the largest storage volume. The design elevations should be set with final clean out and conversion in mind. The bottom elevation of the permanent SWM basin should be lower than the design bottom of the temporary E&S basin. This allows for the establishment of a solid permanent bottom after sediment is removed from the facility.

The riser and barrel hydraulics and materials should be designed as the permanent stormwater control structure. However, the permanent riser may be temporarily modified to provide a sediment basin with wet and dry storage as required by the Virginia Erosion and Sediment Control Handbook, (VESCH), 1992 edition.

Safety

Basins that are readily accessible to populated areas should include all possible safety precautions. Steep side slopes (steeper than 3H:1V) at the perimeter should be avoided and dangerous outlet structures should be protected by enclosures. Warning signs for deep water and potential health risks should be used wherever appropriate. Signs should be placed so that at least one is clearly visible and legible from all adjacent streets, sidewalks or paths. A notice should be posted warning residents of potential waterborne disease that may be contracted by swimming or diving in these facilities.

If the basin's surface area exceeds 20,000 square feet, an aquatic bench should be provided. (Refer to the **Design Criteria for Aquatic Bench**.)

A fence is **required** at or above the maximum water surface elevation **when a basin slope is a vertical wall**. Local governments and homeowner associations may also require appropriate fencing without regard for the steepness of the basin side slopes.

Maintenance

Retention basins have shown an ability to function as designed for long periods without routine maintenance. However, some maintenance is essential to protect the aesthetic and wildlife properties of these facilities.

Vehicular access to the permanent pool area and release structure must be provided to allow for long-term maintenance operations (such as sediment removal) and repairs, as needed. The incorporation of a *sediment forebay* at the inflow points into the basin will help to localize disturbance during sediment removal operations. An onsite area designated for sediment dewatering and disposal should also be included in the design. Care must be taken in the disposal of sediment that may contain an accumulation of heavy metals. **Sediment testing is recommended prior to sediment removal to assure proper disposal**.

A sign should be posted near the basin that clearly identifies the person or organization responsible for basin maintenance. Allowing participation by adjacent landowners or visitors is very helpful, especially if the facility serves as a recreational facility. Maintenance needs that are observed and addressed early will help to lower the overall maintenance costs. Routine maintenance inspections, however, should be conducted by authorized personnel. In all cases, access easements should be provided to facilitate inspection and maintenance operation.

Design Criteria

This section provides recommendations and minimum criteria for the design of stormwater retention basins intended to comply with the Virginia Stormwater Management program. It is the designer's responsibility to decide which aspects of the program apply to the particular facility being designed and if any additional design elements are required. The designer should also consider the long-term functioning of the facility in the selection of materials for the structural components.

Hydrology and Hydraulics

Chapter 4, **Hydrologic Methods** and **Chapter 5**, **Engineering Calculations** should be used to develop the pre- and post-developed hydrology for a basin's contributing watershed, to design and analyze the hydraulics of the riser and barrel system, and to design the emergency spillway.

The design of the riser and barrel system should take into account any additional storage provided above the permanent pool for peak discharge control. Generally, the 2-year storm should be used in *receiving channel adequacy* calculations and the 10-year storm should be used for *flood control* calculations. Alternative requirements such as 1-year extended detention for channel erosion control may be imposed by local ordinances.

The contributing drainage area should be a minimum of 10 acres with an adequate base flow. Fifteen to 20 acres is more appropriate to sustain a healthy permanent pool. Note that this requirement may preclude the use of the Modified Rational Method for the basin's design.

Embankment

The design of the earthen embankment for a retention basin should comply with **Minimum Standard 3.01, Earthen Embankment**. The requirements for geotechnical analysis, seepage control, maximum slopes and freeboard are particularly appropriate.

Principal Spillways

The design of the principal spillway and barrel system, anti-vortex device, and trash racks should comply with **Minimum Standard 3.02, Principal Spillway**.

Emergency Spillway

An emergency spillway that complies with **Minimum Standard 3.03, Vegetated Emergency Spillway** should be provided when possible, or appropriate.

Sediment Basin Conversion

When a proposed stormwater facility is used as a temporary sediment basin, the conversion to the permanent facility should be completed after final stabilization and approval from the appropriate erosion and sediment control authority.

In most cases the design criteria for the temporary sediment basin will require more storage volume (combined wet and dry) than that of a stormwater basin. In such cases, the extra volume should be allocated to the component of the facility that would derive the greatest benefit from the increased storage. This will depend on the primary function of the facility (i.e., water quality enhancement, flood control, or channel erosion control).

If modifications to the riser structure are required as part of the conversion to a permanent stormwater facility, they should be designed so that a) *the structural integrity of the riser is not threatened*, and b) *large construction equipment is not needed within the basin*. Any heavy construction work required on the riser should be completed during its initial installation. It is **NOT** recommended to install a temporary riser structure in the sediment basin and then replace it with a permanent riser after final stabilization. This may affect the structural integrity of the existing embankment and barrel.

The following additional criteria should be considered for a conversion:

1. Final elevations and a complete description of any modifications to the riser structure's geometry should be shown in the approved plans.

2. The wet storage area must be dewatered following the methods outlined in the VESCH, 1992 edition.

3. Sediment and other debris should be removed to a contained spoil area. Regrading of the basin may be necessary to achieve the final design grades and to provide an adequate topsoil layer to promote final stabilization.

4. Final modifications to the riser structure should be carefully inspected for watertight connections and compliance with the approved plans.

5. Final landscaping and stabilization should be per the VESCH, 1992 edition, and **Minimum Standard 3.05, Landscaping** in this handbook.

Permanent Pool

When designing a permanent pool for water quality benefits, certain physical and hydraulic factors can be manipulated to achieve a desired *pollutant removal efficiency*. These factors, which also influence the downstream water quality, include the permanent pool's *volume*, *depth*, *geometry*, *hydraulic residence time*, and *release depth*.

1. **Volume –**

Increasing the *volume* of the permanent pool increases the *residence time*, resulting in an increase in the pollutant removal efficiency of the permanent pool. **Table 3.06-1** provides the target pollutant removal efficiencies associated with different sizing rules.

2. **Depth –**

The *depth* of the permanent pool will affect several features of a retention basin including a) *aquatic plant selection*, b) *fish and wildlife habitat selection*, and c) *the rate at which nutrients are cycled*. Retention basins and artificial marshes built too shallow will not support fish populations year round. Basins built too deep may stratify, creating anaerobic conditions that may result in the resolubilizing of pollutants that are normally bound in the sediment. The release of such pollutants back into the water column can seriously reduce the effectivenes of the BMP and may cause nuisance conditions.

The depth of a stormwater management basin should vary to include as much diversity as possible, with an average depth of 3 to 6 feet. Approximately 15% of the basin area should be less than 18 inches deep. (Schueler, 1987). This can be accomplished by using an aquatic bench along the perimeter of the permanent pool as shown in **Figure 3.06-2**. **Table 3.06-2** below provides recommended surface area - pool depth relationships.

TABLE 3.06 - 2
Recommended Surface Area - Pool Depth Relationships for Retention Basins

BMP	Pool Depth (*ft.*)	Surface Area (*as % of total BMP surface area*)
Retention Basin	0 - 1.5 1.5 - 2 2 - 6	15% 15% 70%

Source: Washington State D.O.E.

3. **Geometry –**

The geometry of a stormwater basin and the associated drainage patterns are usually dictated by site topography and development conditions. However, the alignment of the incoming pipes should be manipulated relative to the release structure to the greatest extent possible to avoid *short-circuiting* of the incoming runoff. *Short-circuiting* is the condition where incoming runoff passes through the basin without displacing the old water. This can be avoided by maximizing the distance between the inlet and outlet structures. It can also be

avoided by designing a *meandering* flow path through the basin, rather than a straight line flow path. In either case, a length-to-width ratio of 2:1 should be maintained. If site conditions prevent using the proper ratio, then baffles made from gabion baskets, earthen berms or other suitable materials may be used to lengthen the flow path (see **Figure 3.06-3**).

A retention basin should be multi-celled with at least two cells and preferably three. The first cell can be used as a sediment forebay to trap coarse sediments and reduce turbulence that may cause resuspension of sediments. This first cell should be easily accessible for maintenance purposes. The second (and third) cell provides for the further settling of pollutants and any biological processes.

4. **Hydraulic Residence Time –**

Hydraulic residence time is the permanent pool volume divided by the average outflow discharge rate. The longer the residence time, the higher the pollutant removal efficiency (Driscoll, 1983, Kulzer, 1989). A retention basin used for channel erosion control and flood control will usually achieve higher pollutant removal rates. This is due to the increased residence time associated with the peak discharge control above the permanent pool. The hydraulic residence time would be a factor in the design of a retention basin with a permanent pool volume based on an impervious area which is relatively small when compared to the contributory drainage area. In this case, the total drainage area discharge will turn over, or replace, the volume of the "undersized" pool volume before it has achieved an adequate residence time. Optimal pollutant removal efficiency is generally associated with a *mean annual hydraulic residence* time of 14 to 30 days (Driscoll, 1988; Kulzer, 1989; Schueler, 1987).

5. **Release Depth –**

The best water quality in a retention basin's permanent pool is usually at or near the surface (Galli, 1988; Redfield, 1983). Under normal dry weather conditions, the concentrations of total dissolved solids, phosphorus, and nitrogen generally decrease in the upper portions of the water column due to physical settling and algal and biological assimilation (Galli, 1992). This suggests that <u>subsurface</u> releases have high levels of nutrients and suspended solids. In addition, deeper basins usually have very low levels of dissolved oxygen in the bottom portions of the water column.

FIGURE 3.06 - 2
Varying Depth of Permanent Pool

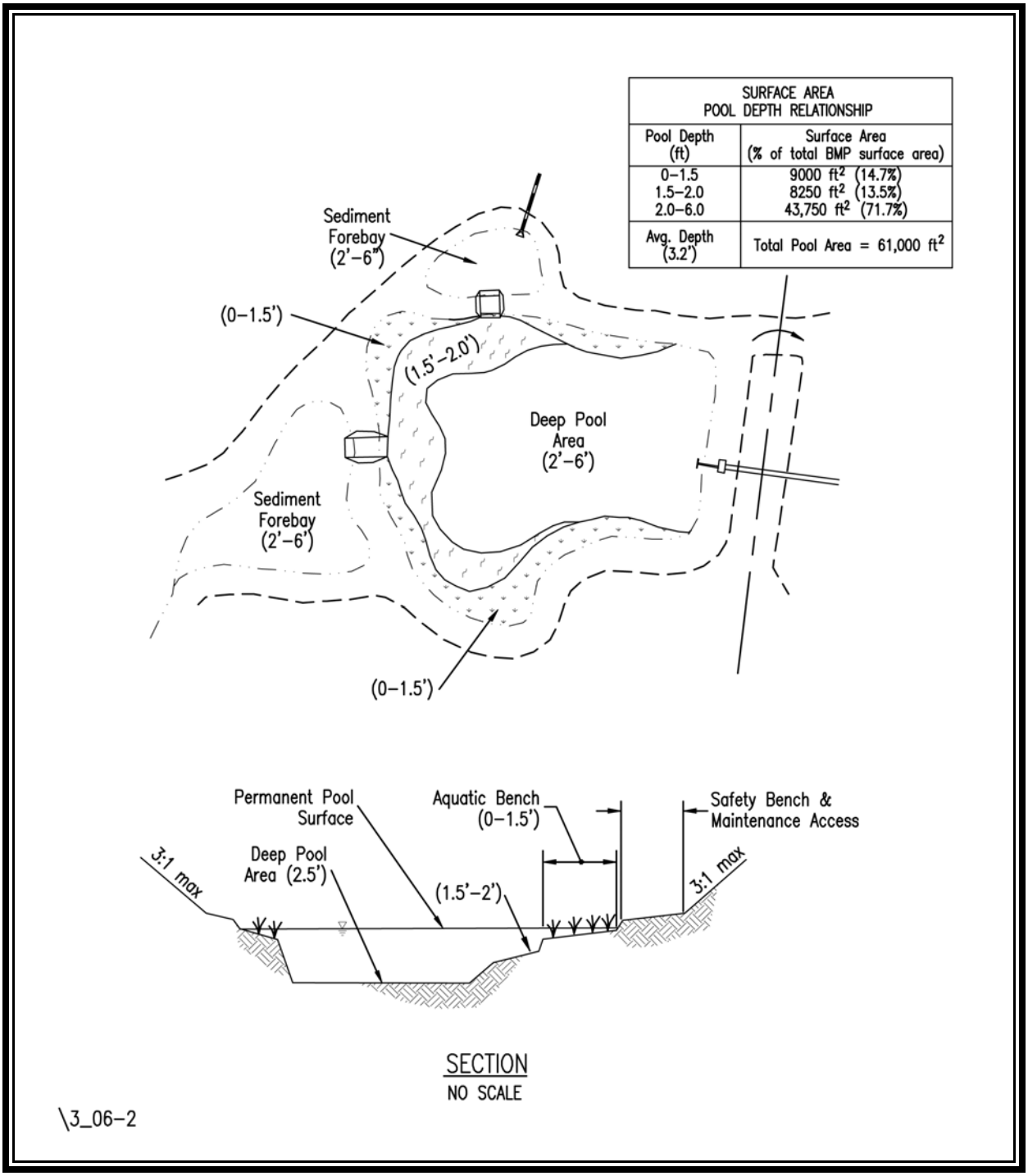

FIGURE 3.06 - 3
Short-Circuiting

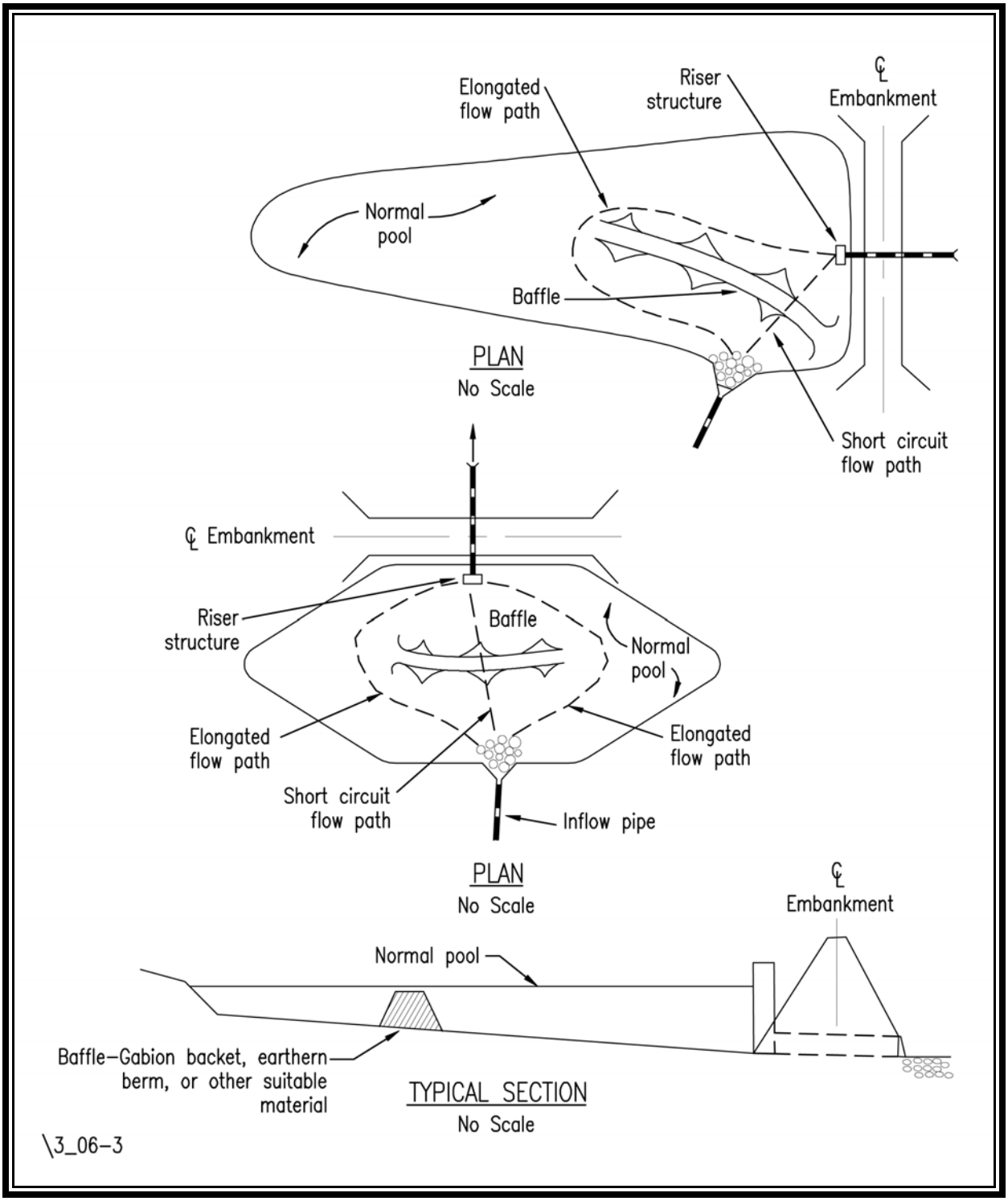

In contrast, the water at or near the surface of a retention basin is warmer because of solar heating of the basin and heated stormwater inflow. This resembles the cycling process of water in natural lakes and water bodies. However, the proximity of a retention basin to development (i.e., impervious surfaces) may lead to an excessive heat buildup from the incoming runoff during the warmer months. Therefore, a release depth of approximately 18 inches from the water surface is recommended (Galli, 1992) to avoid extremes in temperature, nutrient levels, and dissolved oxygen (see **Figure 3.06-4**).

It should be noted that inexpensive design modifications can be incorporated into the design of a retention facility to mitigate downstream impacts such as: a) *oversizing the barrel and adding surgestone or rip rap to the invert to help re-aerate the basin discharge* (Schueler, 1987), and b) *providing shade by planting (or saving) trees around the perimeter of the basin to help lower surface water temperature*.

If the receiving stream supports a trout population, the designer should contact the Department of Game and Inland Fisheries for additional measures to protect the downstream habitat.

FIGURE 3.06 - 4
Typical Retention Basin Control Structure

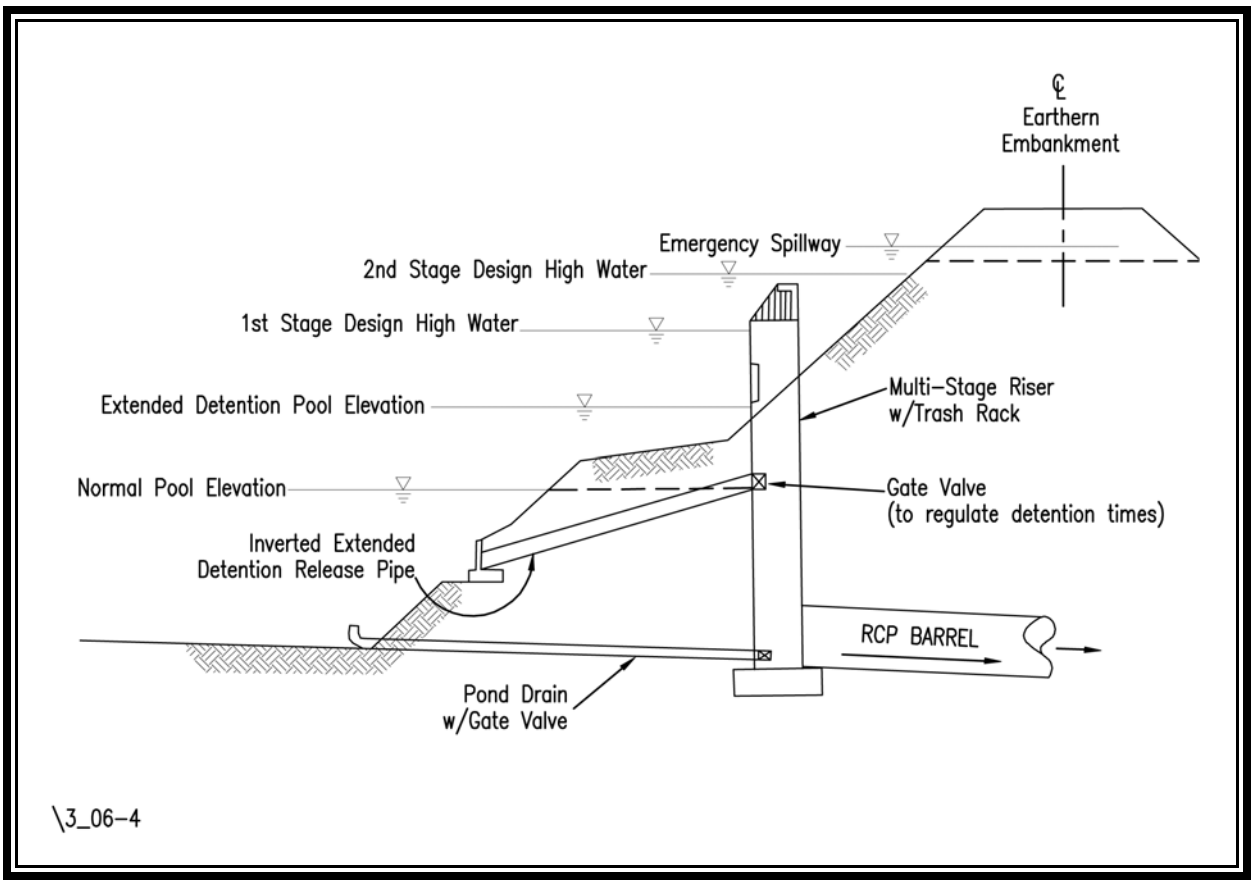

Aquatic Bench

The pollutant removal efficiency of a retention basin can be further enhanced by adding an *aquatic bench*. An aquatic bench is a 10 to 15 foot wide area that slopes from zero inches at the shoreline to between 12 and 18 inches deep in the basin (see **Figure 3.06-5**). This bench provides suitable conditions for a variety of aquatic plants and emergent vegetation. Specific landscaping requirements for an aquatic bench should be provided on the landscaping plan per **Minimum Standard 3.05, Landscaping**.

Most important, an aquatic bench augments the pollutant removal capabilities of a retention basin by providing an environment for aquatic vegetation and associated algae, bacteria and other microorganisms that reduce organic matter and nutrients (Schueler, 1987). In addition, aquatic bench vegetation provides an ideal habitat for wildlife, such as waterfowl and fish, and for predator insects that feed on mosquitoes and other nuisance insects.

An aquatic bench also serves to stabilize and protect the shoreline from erosion resulting from fluctuating water levels, and provides a safety feature by eliminating the presence of a steep submerged slope next to the shoreline.

The increase in pollutant removal efficiency associated with the establishment of an aquatic bench is **approximated** based on available information. Note that discharge monitoring may indicate much higher or lower values since many variables exist in any given stormwater basin design and the efficiencies are estimated.

Sediment Forebay

A *sediment forebay* will help to postpone overall basin maintenance by trapping incoming sediments at a specified location. The forebay should be situated and designed per **Minimum Standard 3.04, Sediment Forebays**. Usually, a sediment forebay is placed at the outfall of the incoming storm drain pipes or channels directed toward the basin and is situated to provide access for maintenance equipment.

A sediment forebay enhances the pollutant removal efficiency of a basin by trapping the incoming sediment load in one area, where it can be easily monitored and removed. The *target pollutant removal efficiency* of a retention basin, as listed in **Table 3.06-1**, is predicated on the use of sediment forebays at the inflow points to the basin.

Liner to Prevent Infiltration

A retention basin should have negligible infiltration through its bottom. Infiltration may impair the proper functioning of the basin and may contaminate groundwater. Where infiltration is anticipated, or in areas underlain by karst topography then a retention or detention facility should **not** be used unless an impervious liner is installed. When using a liner, the specifications provided in **Table**

3.06-3 for clay liners and the following recommendations apply:

1. A clay liner should have a minimum thickness of 12 inches.

2. A layer of compacted topsoil (minimum thickness 6 to 12 inches) should be placed over the liner before seeding with an appropriate seed mixture (refer to the VESCH, 1992 edition.)

3. Other liners may be used provided the engineer can supply supporting documentation that the material will achieve the required performance.

In many cases, the fine particulates and suspended solids in the water column of a new retention basin will settle out and quickly clog the the pores of the bottom soil. However, a geotechnical analysis should address the potential for infiltration and, if needed, specify liner materials.

Safety

The side slopes of a retention basin should be no steeper than 3H:1V and should be stabilized with permanent vegetation. If the basin surface exceeds 20,000 square feet, an aquatic bench should be provided to serve as a safety feature. Fencing may also be required by local ordinance.

Access

A 10 to 12-foot-wide access road with a maximum grade of 12% should be provided to allow vehicular access to both the outlet structure area and at least one side of the basin. The road's surface material should be selected to support the anticipated frequency of use and the anticipated vehicular load without excessive erosion or damage.

TABLE 3.06 - 3
Clay Liner Specifications

Property	Test Method (or equal)	Unit	Specification
Permeability	ASTM D-2434	*cm/sec*	1×10^{-6}
Plasticity Index of Clay	ASTM D-423 & D-424	%	Not less than 15
Liquid Limit of Clay	ASTM D-2216	%	Not less than 30
Clay Particles Passing	ASTM D-422	%	Not less than 30
Clay Compaction	ASTM D-2216	%	95% of Standard Proctor Density

Source: City of Austin, 1988

Landscaping

A qualified individual should prepare the landscape plan for a retention basin. Appropriate *shoreline fringe*, *riparian fringe* and *floodplain terrace vegetation* must be selected to correspond with the expected frequency and duration of inundation. Selection and installation guidelines should be per **Minimum Standard 3.05, Landscaping**.

Vegetation should be planted in soil that is appropriate for the plants selected. Soil tests showing the adequacy of the soil or a soil enhancement plan should be submitted with the overall basin design.

The soil substrate must be soft enough to permit easy installation of the plants. If the basin soil has been compacted or vegetation has formed a dense root mat, the upper 6 inches of soil should be disked before planting. If soil is imported, it should be laid at least 6 inches deep to provide sufficient depth for plant rooting to occur.

Buffer Zones

A vegetated buffer strip should be maintained beside the basin. The strip should be a minimum of 20 feet wide, as measured from the maximum water surface elevation. Refer to **Minimum Standard 3.05, Landscaping**.

FIGURE 3.06 - 5
Typical Retention Basin Aquatic Bench - Section

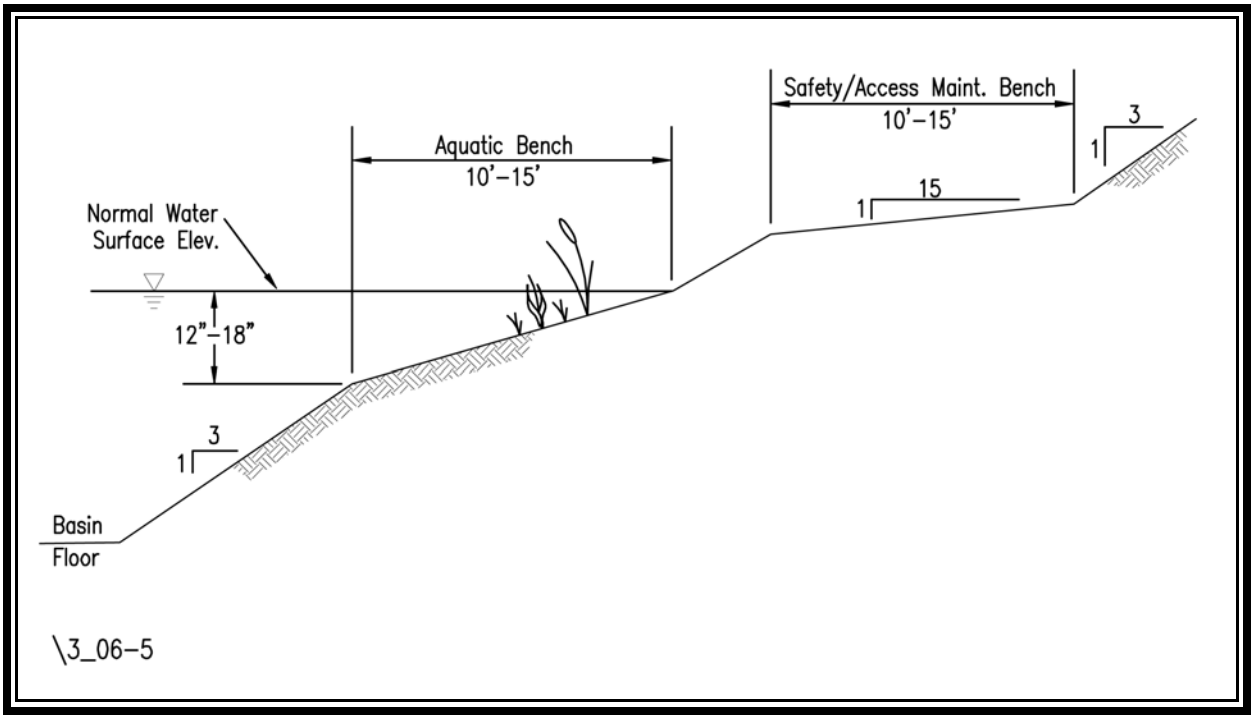

Construction Specifications

The construction specifications for stormwater retention basins outlined below should be considered minimum guidelines. More stringent or additional specifications may be required based on individual site conditions.

Overall, widely accepted construction standards and specifications for embankment ponds and reservoirs, such as those developed by the USDA Soil Conservation Service or the U.S. Army Corps of Engineers, should be followed to build an impoundment.

Further guidance can be found in Chapter 17 of the Soil Conservation Service's Engineering Field Manual. Specifications for the work should conform to methods and procedures indicated for installing earthwork, concrete, reinforcing steel, pipe, water gates, metal work, woodwork and masonry and any other items that are apply to the site and the purpose of the structure. The specifications should also satisfy any requirements of the local plan approving authority.

The following minimum standards contain guidance and construction specifications for various components of retention basins: **3.01, Earthen Embankment**; **3.02, Principal Spillway**; **3.03, Vegetated Emergency Spillway**; **3.04, Sediment Forebay**; and **3.05, Landscaping**.

Maintenance and Inspections

The following maintenance and inspection guidelines are not intended to be all-inclusive. Specific facilities may require other measures not discussed here. The engineer is responsible for determining if any additional items are necessary.

Inspecting and maintaining the structures and the impoundment area should be the responsibility of either the local government, a designated group such as a homeowner's association or an individual. A specific maintenance plan should be formulated outlining the schedule and scope of maintenance operations.

Any standing water pumped during the maintenance operation must be disposed of per the VESCH, 1992 edition and any local requirements.

General Maintenance

Maintenance and inspection guidelines found in the following minimum standards apply: **3.01, Earthen Embankment**; **3.02, Principal Spillway**; **3.03, Vegetated Emergency Spillway**; **3.04, Sediment Forebay**; and **3.05: Landscaping**.

Vegetation

The basin's side slopes, embankment and emergency spillway should be mowed at least twice a year to discourage woody growth. For aesthetic purposes, more frequent mowing may be necessary in residential areas

Specific plant communities may require different levels of maintenance. Upland and floodplain terrace areas, grown as meadows or forests, require very little maintenance, while aquatic or emergent vegetation may need periodic thinning or reinforcement plantings. Note that after the first growing season, it should be obvious if reinforcement plantings are needed. If they are, they should be installed at the onset of the second growing season after construction.

Research indicates that for most aquatic plants the uptake of pollutants is stored in the roots, not the stems and leaves (Lepp 1981). Therefore, aquatic plants should not require harvesting before winter plant die-back. There are still many unanswered questions about the long term pollutant storage capacity of plants. It is possible that aquatic and emergent plant maintenance recommendations may be presented in the future.

Debris and Litter Removal

Debris and litter will accumulate near the inflow points and around the outlet control structure. Such material should be removed periodically. Also, as the water level rises during storm events, floatables accumulate around the grate or trash rack of the control structure. If a flat horizontal trash rack is used, floating debris will become lodged on the trash rack, which will remain clogged until it is manually cleaned. A significant accumulation can clog the riser structure. The use of an angled trash rack is recommended to allow any accumulated debris to slide off as the water level drops.

Sediment Removal

Sediment deposition should be continually monitored in the basin. Removal of any accumulated sediment, in the sediment forebay or elsewhere, is extremely important. A significant accumulation of sediment impairs the pollutant removal capabilities of the basin by reducing the permanent pool volume. The deposited sediment also becomes prone to resuspension during heavy flow periods. Unless unusual conditions exist, accumulated sediment should be removed from the sediment forebay and possibly other deep areas within the permanent pool every 5 to 10 years. The use of a sediment forebay with access for heavy equipment will greatly simplify the removal process. **During maintenance procedures, ensure that any pumping of standing water or dewatering of dredged sediments complies with the VESCH, 1992 edition, and any local requirements**.

Owners, operators, and maintenance authorities should be aware that significant concentrations of heavy metals (e.g., lead, zinc and cadmium) and some organics, such as pesticides, may be expected to accumulate at the bottom of a retention basin. Testing of sediment, especially near points of inflow, should be conducted regularly and **before disposal** to establish the leaching potential and

level of accumulation of hazardous materials. Disposal methods must comply with applicable state and local regulations (e.g., for special waste).

Inspections

A retention basin and its components should be inspected annually, at a minimum, to ensure that they operate in the manner originally intended. Items in need of repair should be addressed promptly and as specified in the comprehensive maintenance program. Detailed inspections by qualified person(s) should address the following areas/concerns:

- Dam settling, woody growth, and signs of piping
- Signs of seepage on the downstream face of the embankment
- Condition of grass cover on the embankment, basin floor and perimeter
- Riprap displacement or failure
- Principal and emergency spillway meet design plans for operation
- Outlet controls, debris racks and mechanical and electrical equipment
- Outlet channel conditions
- Inlet pipe conditions
- Safety features of the facility
- Access for maintenance equipment
- Sediment accumulation
- Debris and trash accumulation
- Erosion of the embankment or side slopes

Design Procedures

1. Determine if the anticipated development conditions and drainage area are appropriate for a stormwater retention basin BMP.

   C Minimum drainage area of 10 acres and/or base flow

2. Determine if the soils (permeability, bedrock, Karst, embankment foundation, etc.) and topographic conditions (slopes, existing utilities, environmental restrictions) are appropriate for a stormwater retention basin BMP.

3. Determine any additional stormwater management requirements (channel erosion, flooding) for the project.

4. Locate the stormwater retention basin on the site.

5. Determine the hydrology and peak discharges of the contributory drainage area for each of the required design storms (**Chapter 4, Hydrologic Methods**).

6. Calculate the permanent pool volume and approximate storage volume requirements (**Chapter 5, Engineering Calculations**).

7. Design the embankment (**Min. Std. 3.01**), principal spillway (**Min. Std. 3.02**), emergency spillway (**Min. Std. 3.03**), sediment forebay (**Min. Std. 3.04**), landscaping plan (**Min. Std. 3.05**), and the permanent pool and other components of a stormwater retention basin BMP (**Min. Std. 3.06**) using **Chapter 5, Engineering Calculations**, and the Minimum Standards listed.

   - permanent pool depth
   - Permanent pool geometry
   - release depth
   - aquatic bench
   - pond drain

8. Design final grading of basin.

   - landscape plan
   - 20-foot buffer area
   - safety (3:1 slopes with bench)
   - access

9. Establish specifications for sediment control and sediment basin conversion (if required).

10. Establish construction sequence and construction specifications.

11. Establish maintenance and inspection requirements.

Checklists

Refer to **Appendix-3A** for **Design and Plan Review**, **Construction Inspection**, and **Operation and Maintenance** Checklists.

REFERENCES

American Society of Civil Engineers. "Stormwater Detention Outlet Control Structures." Task Commission on the Design of Outlet Control Structures. New York, NY:ASCE, 1985.

Brater, E.F. and H.W. King. Handbook of Hydraulics. 6th ed. New York: McGraw Hill Book Company, 1976.

Chesapeake Bay Local Assistance Department (CBLAD). Local Assistance Manual: A Guide for the Development of Local Programs in Order to Comply with the Chesapeake Bay Preservation Act. Richmond, Virginia: November 1989.

Debo, T.N. and Reese, A. J. Municipal Stormwater Management. 1995.

Federal Highway Administration. "Debris-Control Structures." Hydraulic Engineering Circular No. 9, 1971.

Federal Highway Administration. Retention, Detention and Overland Flow for Pollutant Removal from Highway Stormwater Runoff: Interim Guidelines for Management Measures. Pub. No. FHWA/RD-87/056. McLean, Virginia: March, 1988.

Galli, J. Analysis of Urban BMP Performance and Longevity in Prince George's County, Maryland. Washington, D.C.: Metropolitan Washington Council of Governments (MWCOG), August, 1992.

Maryland Department of Natural Resources (Md. DNR). Guidelines for Constructing Wetland Stormwater Basins. Annapolis, Maryland: Water Resources Administration, March, 1987.

Maryland Department of Natural Resources (Md. DNR). Wetland Basins for Stormwater Treatment; Discussion and Background. Annapolis, Maryland: Water Resources Administration, undated.

McCuen, R.H. "Design Accuracy of Stormwater Detention Basins." Technical Report, Department of Civil Engineering, University of Maryland, 1983.

Northern Virginia Planning District Commission. Northern Virginia BMP Handbook. 1992.

Perham, R.E. "Floating Debris Control: A Literature Review." Hanover, NH: U.S. Army CREL, 13, 1987.

Poertner, H.G. "Practices in the Detention of Urban Stormwater Runoff." American Public Works Association, OWWR Proj. C-3380, 1974.

Schueler, T.R., P.A. Kumble, and M.A. Heraty, A Current Assessment of Urban Best Management Practices. Washington, D.C.: Metropolitan Washington Council of Governments (MWCOG), March 1992.

Schueler, T.R. Design of Stormwater Wetland Systems: Guidelines for Creating Diverse and Effective Stormwater Wetland Systems in the Mid-Atlantic Region. Washington, D.C.: Metropolitan Washington Council of Governments, October, 1992.

Schueler, T.R. Controlling Urban Runoff: A Practical Manual for Planning and Designing Urban BMPs. Washington, D.C.: Metropolitan Washington Council of Governments, July, 1987.

Smith, P.H. and J.S. Cook, "Stormwater Management Detention Pond Design Within Floodplain Areas." Trans., Res. Record 1017, 1987.

Stahre, P. and B.Urbonas. "Stormwater Detention." Prentice Hall, 1990.

State of Maryland. "Design Procedures for Stormwater Management Detention Structures." Department of the Environment, Sediment and Stormwater Division, 1987.

U. S. Department of the Interior, Bureau of Reclamation. Design of Small Dams. 1987.

USDA Soil Conservation Service. Engineering Field Manual.

USDA Soil Conservation Service. National Engineering Handbook.

Virginia Department of Conservation and Recreation (DCR). Virginia Erosion and Sediment Control Handbook (VESCH). 3rd. ed. Richmond, Virginia: 1992.

Washington State Department of Ecology. "Stormwater Management Manual for the Puget Sound Basin." 1992.

Retention basin with small island.

Retention basin in ultra-urban setting (under construction).

Retention Basin

Chapter 3.06

Retention basin – Note flat slopes with “rough” edge and aquatic bench provided as safety and pollutant removal features.

Retention Basin

MINIMUM STANDARD 3.07

EXTENDED-DETENTION BASIN & *ENHANCED* EXTENDED-DETENTION BASIN

View BMP Images

LIST OF ILLUSTRATIONS

#	FIGURES	PAGE
3.07 - 1a-b	Extended-Detention Basin - Plan, Section	3.07-2,3
3.07 - 2a-b	*Enhanced* Extended-Detention Basin - Plan, Section	3.07-4,5
3.07 - 3a-c	Trash and Debris Rack Configurations for Extended-Detention Control Structures	3.07-8-10
3.07 - 4	Flow Path/Short-Circuiting	3.07-25

#	TABLES	PAGE
3.07 - 1	Pollutant Removal Efficiencies for Extended-Detention Basins	3.07-5
3.07 - 2	Recommended Allocation of Surface Area and Treatment Volume for Depth Zones	3.07-21
3.07 - 3	Clay Liner Specifications	3.07-23

MINIMUM STANDARD 3.07

EXTENDED-DETENTION BASIN & *ENHANCED* EXTENDED-DETENTION BASIN

Definition

An extended-detention basin is an impoundment that temporarily stores runoff for a specified period and discharges it through a hydraulic outlet structure to a downstream conveyance system. An extended-detention basin is usually dry during non-rainfall periods.

Purpose

An extended-detention basin can be designed to provide for one, or all, of the following: a) *water quality enhancement*, b) *downstream flood control*, and c) *channel erosion control*.

Water Quality Enhancement

An **extended-detention basin** improves the quality of stormwater runoff through gravitational settling. However, due to frequent high inflow velocities, settled pollutants often get resuspended.

An ***enhanced*** **extended-detention basin** has a higher efficiency than an extended-detention basin because it incorporates a shallow marsh in its bottom. The shallow marsh provides additional pollutant removal through *wetland plant uptake*, *absorption*, *physical filtration*, and *decomposition*. The shallow marsh vegetation also helps to reduce the resuspension of settled pollutants by trapping them.

The target pollutant removal efficiencies for both extended-detention and *enhanced* extended-detention basins are presented in **Table 3.07-1**. The target pollutant removal efficiencies are based on certain design criteria associated with the physical characteristics of the basin, and shallow marsh, when used.

FIGURE 3.07 - 1a
Extended-Detention Basin - Plan

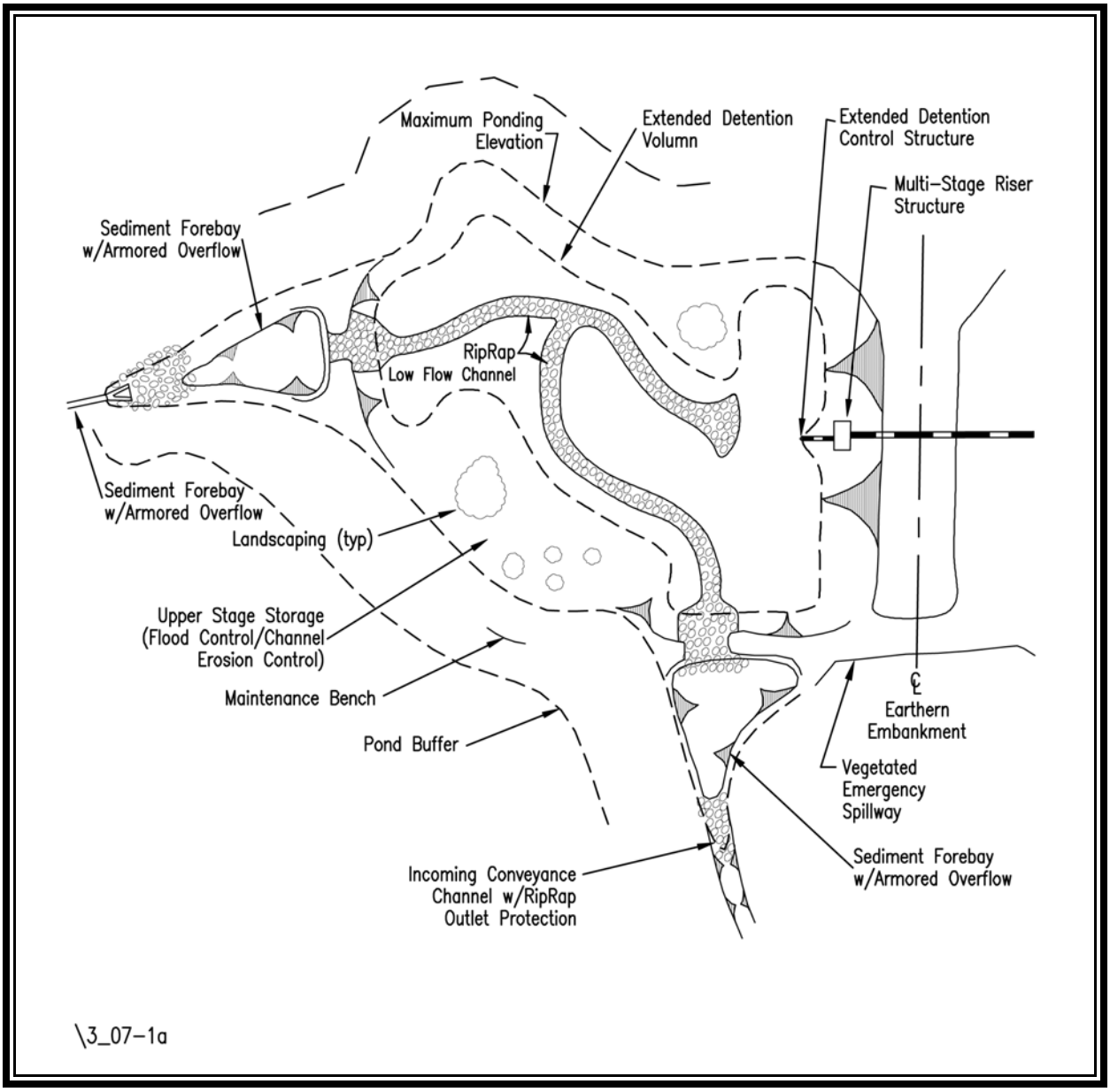

FIGURE 3.07-1b
Extended-Detention Basin - Section

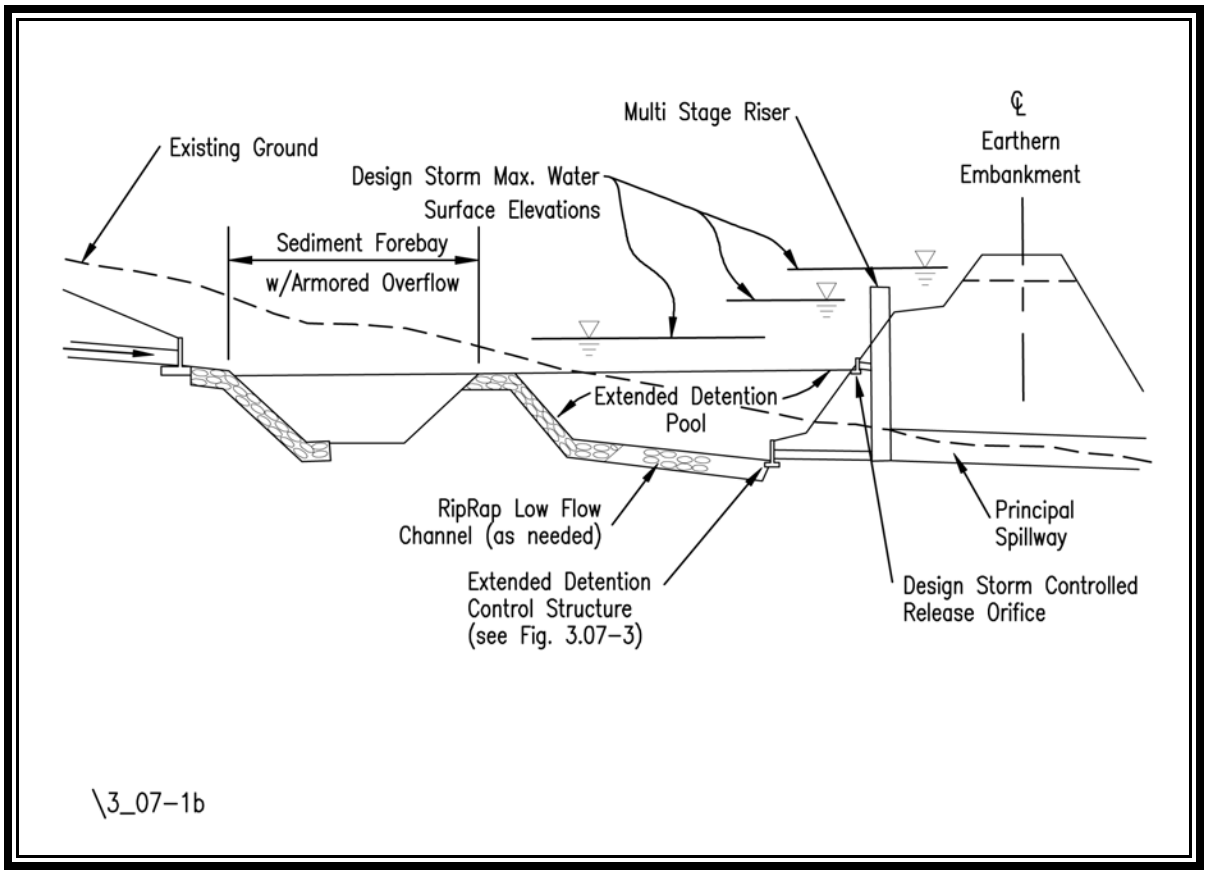

Flood Control

Extended-detention basins can be designed for flood control by providing additional storage above the extended-detention volume, and by reducing the peak rate of runoff from the drainage area. The design storms chosen for flood control are usually specified by ordinance, or are based on specific watershed conditions. By managing multiple storms, such as the 2- and 10-year storms, adequate flood control may be provided for a broad range of storm events.

The additional volume required for storage above the extended-detention volume can be readily determined using the hydrologic methods discussed in **Chapter 4, Hydrologic Methods**. Once this volume is known, a control or spillway structure can be designed and the reservoir routing and channel capacity design techniques discussed in **Chapter 5, Engineering Calculations**.

FIGURE 3.07 - 2a
Enhanced Extended-Detention Basin - Plan

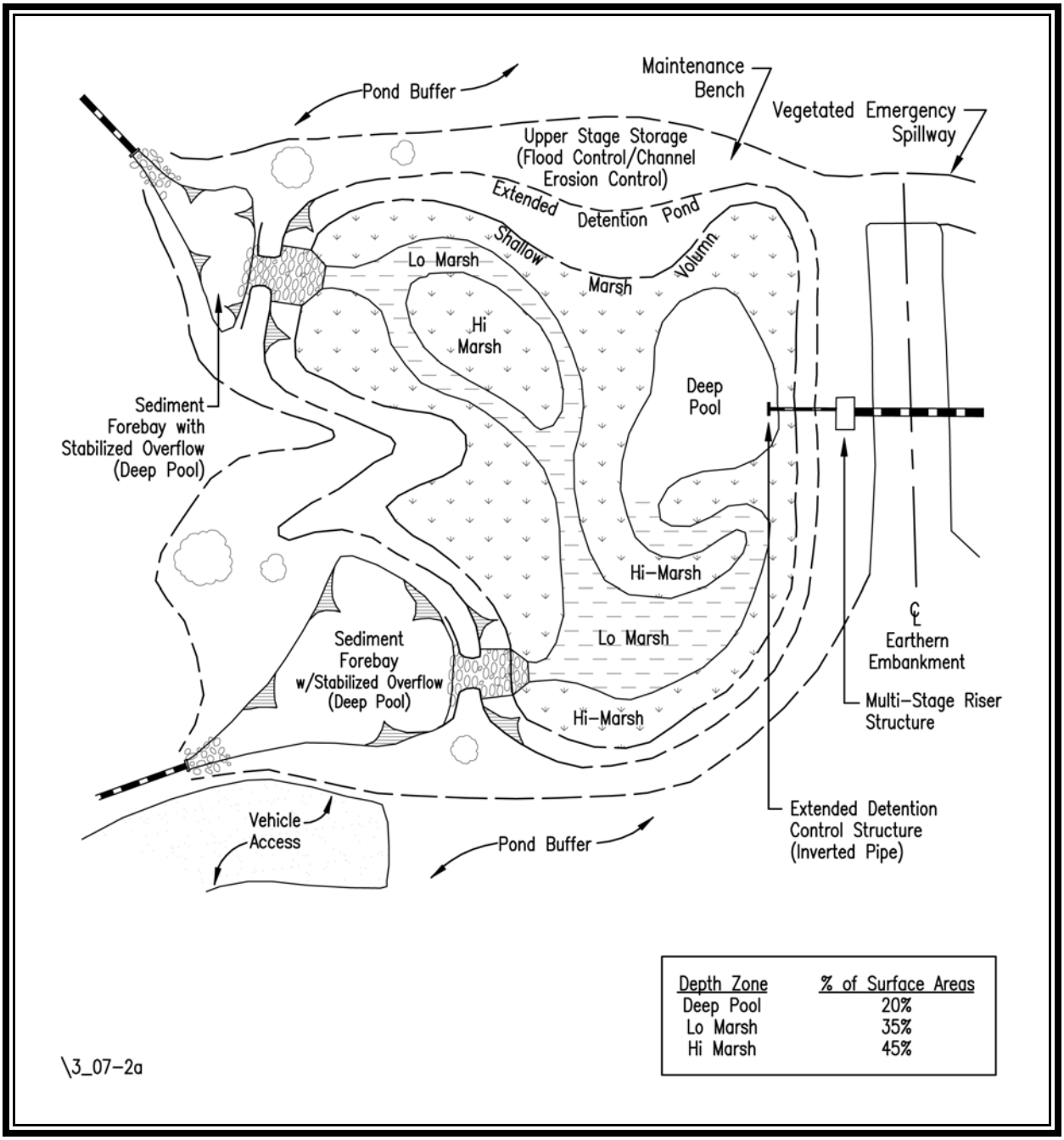

Depth Zone	% of Surface Areas
Deep Pool	20%
Lo Marsh	35%
Hi Marsh	45%

FIGURE 3.07 - 2b
Enhanced Extended-Detention Basin - Section

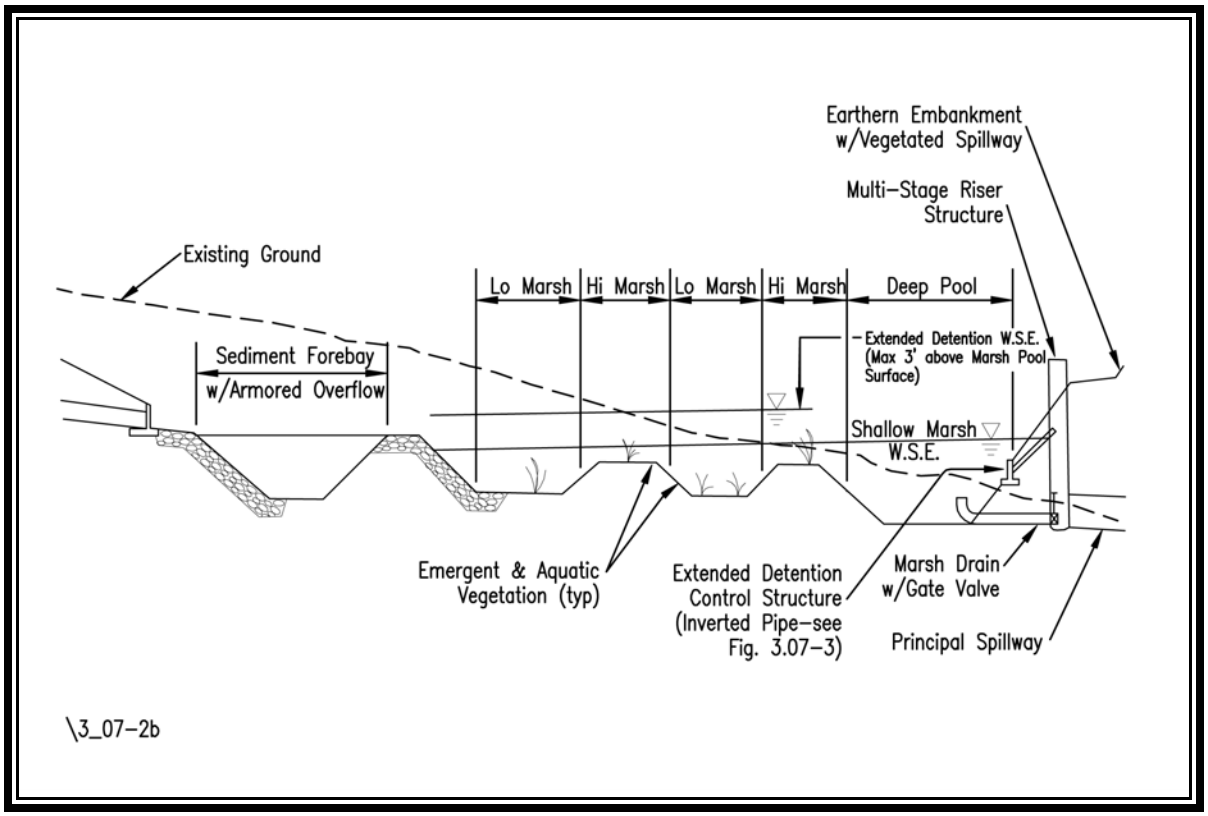

TABLE 3.07 - 1
Pollutant Removal Efficiencies for
Extended-Detention & Enhanced Extended-Detention Basins

Type	Target Phosphorus Removal Efficiency	Impervious Cover
Extended-detention (30 *hr*. Drawdown of 2 × WQ Volume)	35%	22 - 37%
Enhanced extended-detention (30-*hr*. Drawdown of 1 × WQ Volume, and 1 × WQ Volume Shallow Marsh)	50%	38 - 66%

Channel Erosion Control

The objective in controlling channel erosion is to reduce the rate of discharge from a designated frequency storm to below the critical velocity of the downstream channel. The critical velocity of a channel is the velocity that, when exceeded, causes the channel bed or banks to erode. The Virginia Erosion and Sediment Control Handbook, 1992 edition, provides the theoretical critical velocities for various natural channel linings. This critical velocity approach, however, does not consider the frequency or the duration of the critical velocity flow. An increase in impervious cover will increase the frequency of occurance of the "pre-developed" design storm discharge by raising the rainfall to runoff response characteristics of the drainage area. A detention basin will increase the duration of the "pre-developed" design storm discharge by releasing the runoff over time. (A detention basin lowers the peak by spreading it out over a longer period of time.) An extended-detention basin, on the other hand, reduces the discharge based on an extended period of time rather than a peak rate of discharge. Extended-detention of a specific design storm will typically result in lower rates of discharge than the "pre-developed" rate (or critical velocity), thereby compensating for the effects of increased frequency and duration.

The selection of an design storm and a extended-detention period is not a scientific process and is currently determined to be the runoff from the 1-year frequency storm, detained and released over a 24 hour period. Studies show a significant reduction in stream channel erosion below extended-detention facilities designed to this criteria (Galli MWCOG, 1992). Extended-detention of the 1-year storm lowers the discharge velocities from a broad range of storm frequencies to non-erosive levels.

Conditions Where Practice Applies

Drainage Area

The **minimum** contributing drainage area for an extended-detention basin varies with the required extended-detention volume and draw down period and the resulting orifice size. The orifice configuration for small drainage areas should be selected carefully since small openings (less than 3 inches) are prone to clogging. Several different configurations for effective trash, debris, and sediment control are presented in **Figure 3.07-3**. The engineer is free to choose any of these, or to select from other innovative designs.

The **maximum** drainage area served by an extended-detention basin will vary from watershed to watershed. Drainage areas above 50 to 75 acres may require provisions for *base flow*. (Refer to **Design Criteria**). Care should be taken when sizing the water quality orifice if base flow is present.

An undersized orifice may create an undersized permanent pool within the extended-detention volume, leaving inadequate volume above it to provide the required extended-detention. An oversized orifice will result in little extended-detention of the water quality volume.

Development Conditions

Lacking a permanent pool of water, a detention facility is rarely considered aesthetically pleasing. It is, therefore, recommended for *low-visibility* sites. In certain situations, an extended-detention basin may be used on a *high-visibility* site, but the designer must be careful to avoid stagnation or excessive infiltration of the shallow marsh. Maintenance of the basin's shallow marsh is not necessarily critical to its ability to remove pollution, but maintenance **is critical** to ensure the BMP's acceptance by adjacent landowners.

Extended-detention basins can be used for low- to medium-density residential or commercial projects, as classified by their impervious cover. (see **Table 3.07-1**). Along with the storage and shallow marsh volumes required in the basin, a minimum 20-foot vegetated buffer should also be provided. This requirement results in the need for more land. It is for this reason that the use of extended-detention basins may not be the best choice of water quality BMP in developing watersheds where land is at a premium. This strengthens the argument for a regional or watershed approach to stormwater management. A regional extended-detention basin is not only more cost-effective, but is also more likely to be installed on land that is not suitable for development. (It should be noted, however,that the environmental impacts and appropriate permits must still be considered for such an application.)

FIGURE 3.07 - 3a
Trash and Debris Rack Configurations for Extended-Detention Control Structures

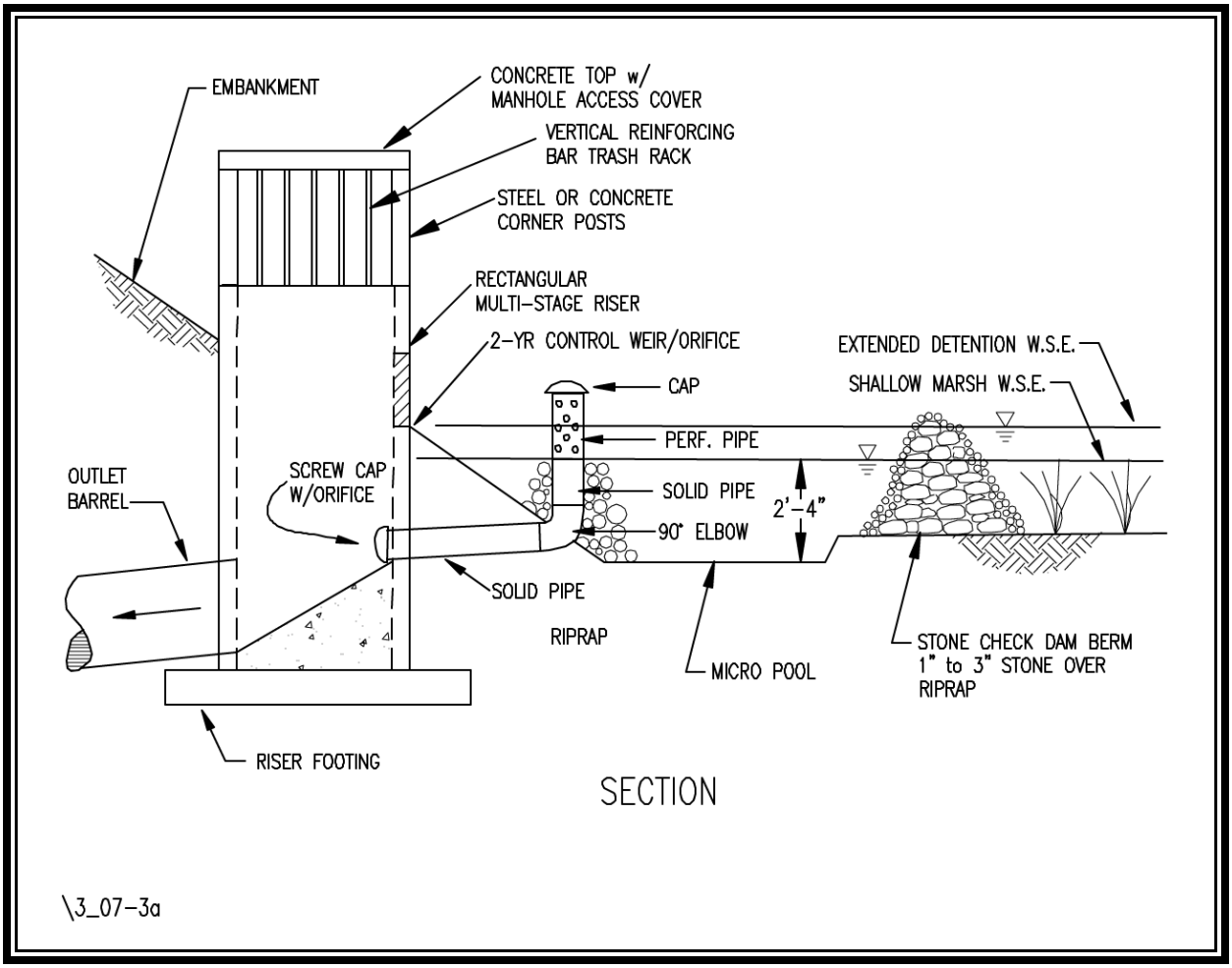

FIGURE 3.07 - 3b
Trash and Debris Rack Configurations for Extended-Detention Control Structures

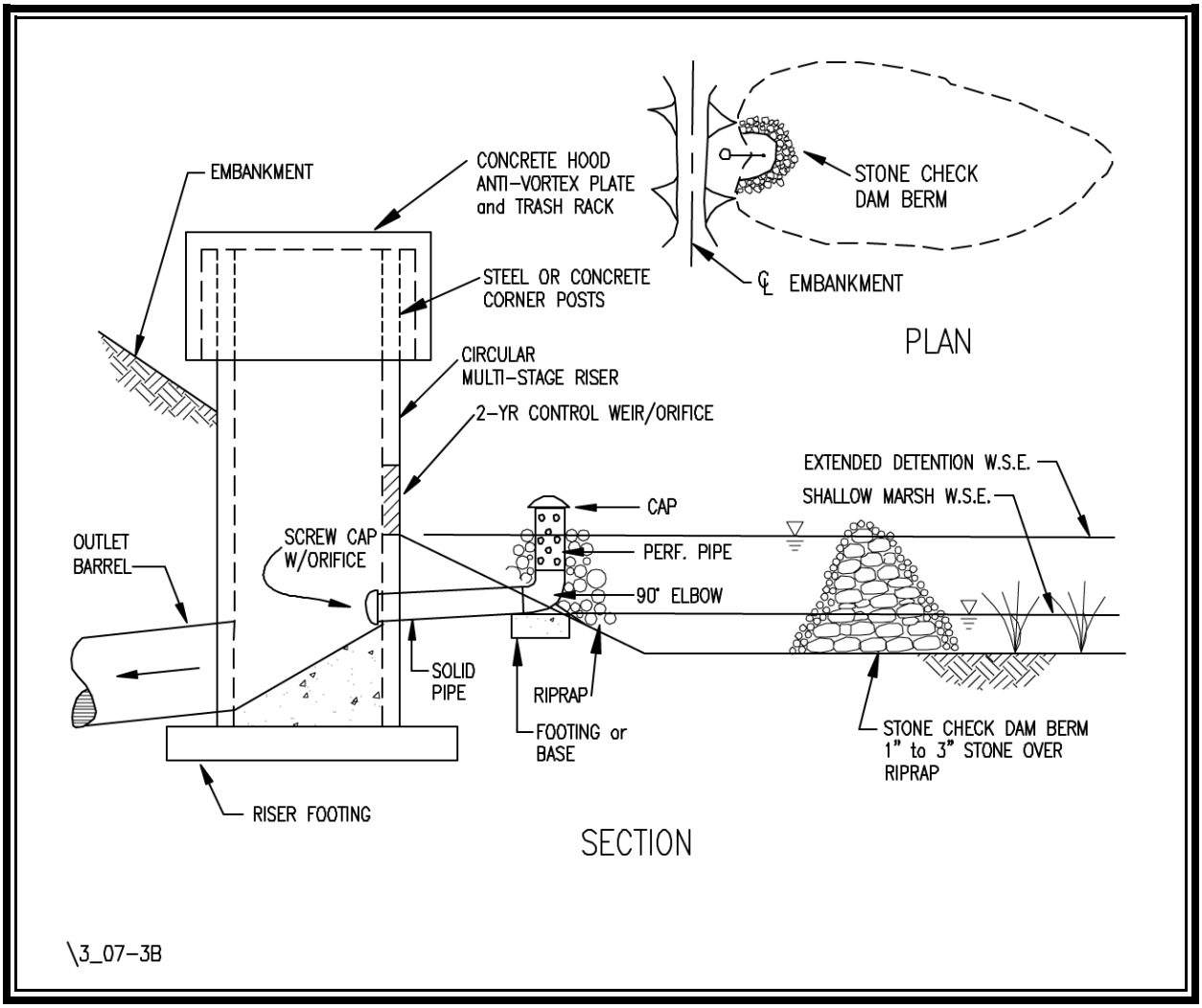

FIGURE 3.07 - 3c
Trash and Debris Rack Configurations for Extended-Detention Control Structures

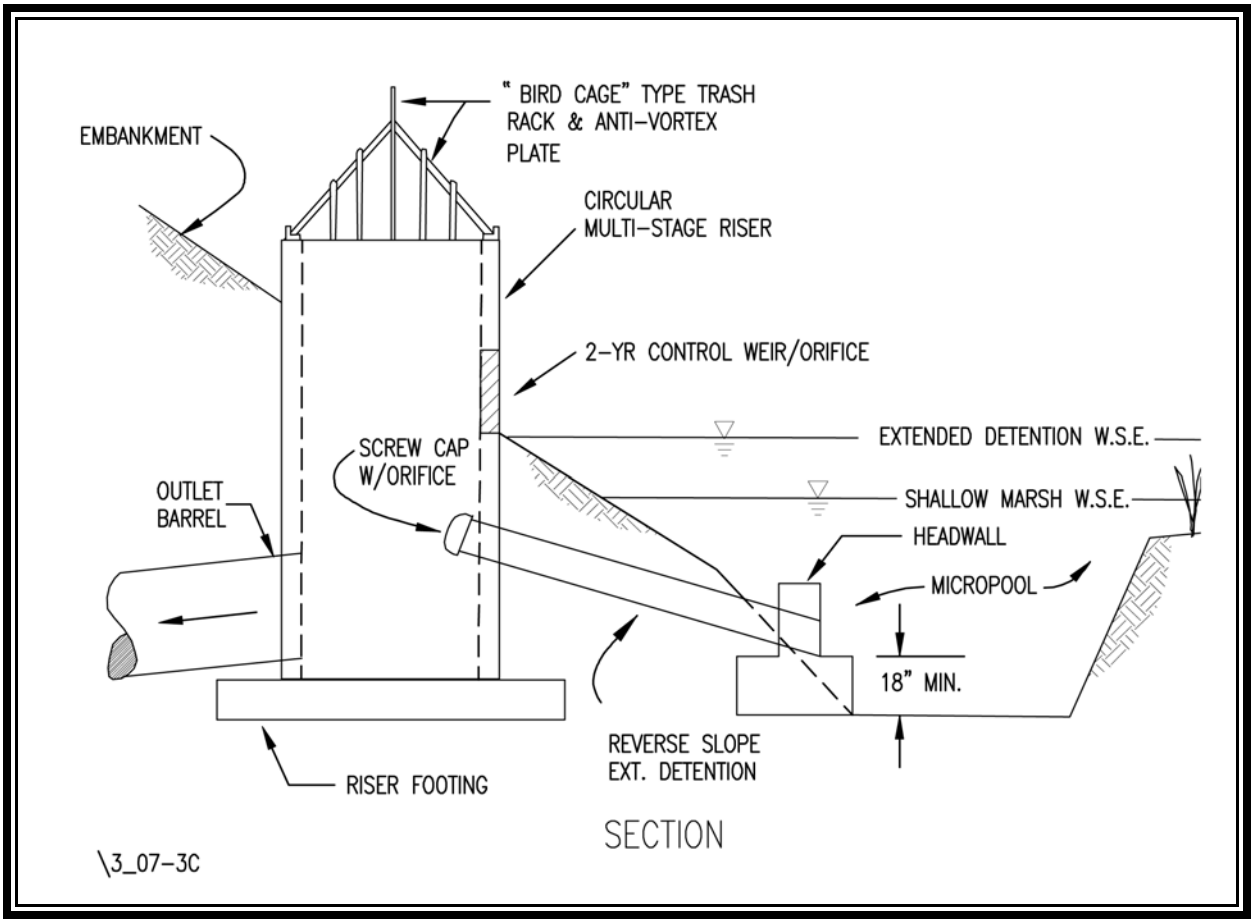

Planning Considerations

The success of an extended-detention basin is dependent on the designer's ability to identify any site and downstream conditions that may affect the design and function of the basin. Above all, the facility should be compatible with both upstream and downstream stormwater systems to promote a *watershed approach* in providing stormwater management.

The planning considerations for designing the shallow marsh of an *enhanced* extended-detention basin are very similar to those of a constructed wetland (refer to **Minimum Standard 3.09, Constructed Stormwater Wetland; Planning Considerations**).

Site conditions

Existing site conditions should be considered in the design and location of an extended-detention basin. Features such as topography, wetlands, structures, utilities, property lines, easements, etc., may impose constraints on the development. Local government land use and zoning ordinances may also specify certain requirements.

All extended-detention basins should be a minimum of 20 feet from any structure or property line, and 100 feet from any septic tank/drainfield. Extended-detention basins should also be a minimum of 50 feet from any steep slope (greater than 15%). Otherwise, a geotechnical report will be required to address the potential impact of any basin that must be constructed on or near such a slope.

Additional considerations are as follows:

1. **Soils –**

   In the past, many designs were accepted based upon soils information compiled from available data, such as SCS soil surveys. While such a source may be appropriate for a pre-engineering feasibility study, final design and acceptance **should be based on an actual subsurface analysis and a permeability test**, accompanied by appropriate engineering recommendations. The references listed at the end of this standard and at the end of **Minimum Standard 3.10, Infiltration Practices** provide more detailed information regarding the feasibility analysis of subsurface conditions for various soil types. Due to its complexity, this topic is not covered here.

   Highly permeable soils are not suited for extended-detention basins. A basin with highly permeable soils will act as an infiltration facility until the soils become clogged. Although this phenomenon is not always considered a negative impact, it does change the function and design of the basin. For an *enhanced* extended-detention basin, the soils must support the shallow marsh **at the time of stabilization and planting**.

A thorough analysis of the soil strata should be conducted to verify its suitability for use with an extended-detention basin. The geotechnical study required for the embankment design (refer to **Minimum Standard 3.01, Earthen Embankment**) will often provide adequate data for this purpose. The soil permeability may be such that the basin can support a shallow marsh. However, as the depth of the temporary storage increases, the increased head or pressure on the soil may increase the rate of infiltration. If necessary, a liner of clay, geosynthetic fabric, or other suitable material may be used in the basin (as specified by a geotechnical engineer). Refer to the design criteria for basin liners.

2. **Rock –**

The subsurface investigation should also identify the presence of rock or bedrock. Excavation of rock may be too expensive or difficult with conventional earth moving equipment.Blasting the rock for removal may be possible, but it may also open seams or create cracks in the underlying rock, resulting in an unwanted drawdown of the shallow marsh. Blasting of rock is not recommended unless a liner, as described above, is used.

3. **Karst –**

In regions where Karst topography is prevalent, projects may require thorough soils investigation and specialized design and construction techniques. Since the presence of karst may affect BMP selection, design, and cost, a site should be evaluated **during the planning phase of the project**.

4. **Existing Utilities –**

Most utility companies will not allow a permanent or temporary pool to be installed over their underground lines or right-of-ways. If such a site must be used, the designer should obtain permission from the utility company **before designing the basin**. The relocation of any existing utilities should be researched and the costs included in the overall basin cost estimate.

Environmental Impacts

1. **Wetlands–**

Large facilities and/or regional facilities lend themselves to being placed in low lying, and usually environmentally sensitive, areas. Such locations often contain wetlands, shallow marshes, perennial streams, wildlife habitat, etc., and may be protected by state or federal laws. The owner or designer should investigate the regional wetland maps and contact appropriate local, state, and federal agencies to verify the presence of wetlands, their protected status, and the suitability for an extended-detention basin at the location in question.

With careful planning, it may be possible to incorporate wetland mitigation into an extended-detention basin design. This assumes that the functional value of the existing or impacted wetland can be identified and included, reconstructed, or mitigated for, in the basin. Contact the Virginia Department of Environmental Quality for more information regarding wetland mitigation.

2. **Downstream Impacts–**

Urban detention and retention basin design should be coordinated with a watershed or regional plan for managing stormwater runoff, if available. In a localized situation, an individual basin can provide effective protection for the downstream channel if no other areas contribute runoff in a detrimental way to the channel. However, an uncontrolled increase in the number of impoundments within a watershed can severely alter natural flow conditions, causing combined flow peaks or increased flow duration. This can ultimately lead to flooding downstream degradation.

3. **Upstream Impacts–**

The upstream channel must also be considered, especially when the extended-detention basin is used to control downstream channel erosion. Erosive upstream flows will not only degrade the upstream channel, but will also significantly increase the maintenance requirements in the basin by depositing large amounts of sediment eroded from the channel bottom.

Water Quality Enhancement

In an extended-detention basin, the quality of the incoming stormwater is improved through *gravitational settling* of pollutants from the water quality volume. The pollutant removal efficiency for *soluble* pollutants is usually much **lower** than for *particulate pollutants*. Therefore, the efficiency of an extended-detention basin can be **enhanced** by adding a *shallow marsh* to the lower stage of the basin. The shallow marsh creates physical and biological characteristics that are more conducive to the removal process for soluble pollutants.

Settling column studies suggest a maximum upper limit of approximately 40 to 50% removal for total phosphorous after 48 hours, with most of the removal occurring within the first 6 to 12 hours (MWCOG, 1987). However, field studies show a much broader range in removing phosphorous (15-70%) and in removing sediment (65%). Since the soluble form of phosphorous comprises nearly half the phosphorous found in urban runoff, the lower efficiency of 35% (**Table 3.07-1**) is deemed appropriate. The increase in efficiency of *enhanced* extended-detention is attributed to the ability of the shallow marsh to reduce the soluble pollutant levels.

Providing a larger extended-detention volume (similar to providing a larger permanent pool for a retention basin) may not increase the pollutant removal efficiency. **Increasing the volume without increasing the detention time results in a larger orifice size and, therefore, less control of the smaller "first flush" storms**. Simply increasing the detention time will not provide additional efficiency either, since the 30-hour drawdown period exceeds the *probable settling time* associated with most particulate pollutants.

The pollutant removal efficiency in an *enhanced* extended-detention basin **can** be increased, however, by enlarging the volume of the shallow marsh. As the volume of the marsh is increased, with respect to the contributing drainage area, the *hydraulic residence time* is increased. This longer residence time provides more opportunity for further biological uptake and decomposition of pollutants.

Flooding and Channel Erosion Control

Flood control and downstream channel erosion are managed by storing additional runoff above the extended-detention pool (and shallow marsh) and by properly sizing the discharge opening in the riser structure.

When selecting an extended-detention basin, the biggest concern is how much land it requires. The storage volume needed above the extended-detention pool (and shallow marsh) must be approximated and its availability verified on the preliminary site plan.

A preliminary sizing estimate is recommended ***during the planning stage*** *to verify the feasibility of using an extended-detention basin. (See* ***Chapter 5, Engineering Calculations*** *for Storage Volume Requirement Estimates).*

Sediment Control

An extended-detention basin may be used as a *temporary sediment control basin* during construction. The design of a temporary sediment basin is based on the *maximum drainage area* and *rate of runoff* expected anytime during the site construction process. In contrast, the design of the permanent stormwater basin is based on *post-developed land use conditions*. When designing a basin to provide both temporary sediment control and permanent stormwater management, the criteria that produces the largest storage volume should be used to size the basin. The discharge structure should be designed as a permanent stormwater facility with respect to its riser and barrel hydraulics and materials. The riser's geometry may then be temporarily modified to provide the wet and dry storage for the temporary sediment basin, as required by VESCH, 1992 edition.

Safety

Basins that are readily accessible to populated areas should include all possible safety precautions. Steep side slopes (steeper than 3H:1V) at the perimeter should be avoided and dangerous outlet facilities should be protected by enclosures. Warning signs for temporary deep water conditions and potential health risks should be used wherever appropriate. Signs should be placed so that at least one is clearly visible and legible from all adjacent streets, sidewalks or paths. A dry basin may hold a significant amount of soft sediment in the bottom, posing a danger to small children.

A fence is required at or above the maximum water surface elevation when a basin slope is a vertical wall. Local governments and homeowners associations may also require appropriate fencing despite the steepness of the basin side slopes.

Maintenance

Extended-detention basins have shown an ability to function as designed for long periods without routine maintenance. However, some maintenance is essential to protect the aesthetic properties of these facilities.

Vehicular access to the sediment forebay and the release structure should be provided to allow for long-term maintenance (such as sediment removal) and repairs, as needed. The use of a sediment forebay at the upstream end of the basin will help to localize the disturbance during routine sediment removal operations. An onsite area designated for sediment dewatering and disposal should also be included in the design. Care must be taken in the disposal of sediment that may contain an accumulation of heavy metals. **Sediment testing is recommended prior to sediment removal to assure proper disposal**.

A sign should be posted near the basin that clearly identifies the person or organization responsible for basin maintenance. Allowing participation by adjacent landowners or visitors is very helpful, especially if the facility is used for recreation. Maintenance items observed and addressed early will

help to limit overall maintenance costs. Routine maintenance inspections, however, should be conducted by authorized personnel
.

Design Criteria

This section provides recommendations and minimum criteria for the design of extended-detention and *enhanced* extended-detention basins intended to comply with the Virginia Stormwater Management program. It is the designer's responsibility to decide which aspects of the program are applicable to the particular facility being designed and to decide if any additional design elements are required. The designer should also consider the long-term functioning of the facility when selecting materials for the structural components.

Hydrology and Hydraulics

The pre- and post-developed hydrology for a basin's contributing watershed, the hydraulic analysis of the riser and barrel system, and the emergency spillway design should be developed using **Chapter 4, Hydrologic Methods** and **Chapter 5, Engineering Calculations**.

Generally, the 2-year storm should be used in *receiving channel adequacy* calculations and the 10-year storm should be used for *flood control* calculations. Alternate requirements, such as 1-year extended detention for channel erosion control may be imposed by local ordinances.

Embankment

The design of the earthen embankment for an extended-detention and *enhanced* extended-detention basin should comply with **Minimum Standard 3.01, Earthen Embankment**. The requirements for geotechnical, seepage control, maximum slope, and freeboard are particularly appropriate.

Principal Spillway

The design of the principal spillway and barrel system, anti-vortex device, and trash racks should comply with **Minimum Standard 3.02, Principal Spillway**.

Emergency Spillway

An emergency spillway that complies with **Minimum Standard 3.03, Vegetated Emergency Spillway** should be provided when possible, or appropriate.

Sediment Basin Conversion

When a proposed stormwater facility is used initially as a temporary sediment basin, conversion to the permanent facility should be completed after final stabilization and approval from the appropriate erosion and sediment control authority.

Sometimes, the temporary sediment basin design criteria will require more storage volume than that of a stormwater basin. In such cases, the extra volume may be allocated to the component of the facility that would derive the greatest benefit from increased storage. This will depend on the primary function of the facility (i.e., water quality enhancement, flood control, or channel erosion control).

If modifications to the riser structure are required as part of the conversion to a permanent basin, they should be designed so that a) *the structural integrity of the riser is not threatened*, and b) *large construction equipment is not needed within the basin*. Any heavy construction work required on the riser should be completed during its initial installation. It is **NOT** recommended to install a temporary sediment basin riser structure in the basin and then replace it with a permanent riser after final stabilization. This may affect the structural integrity of the existing embankment and barrel.

The following additional criteria should be considered for a conversion:

1. Final elevations and a complete description of any modifications to the riser structure geometry should be shown on the approved plans.

2. The wet storage area must be dewatered following the approved methods in VESCH, 1992 edition.

3. Sediment and other debris should be removed to a contained spoil area. Regrading of the basin may be necessary to achieve the final design grades and to provide an adequate topsoil layer to promote final stabilization.

4. Final modifications to the riser structure should be carefully inspected for water tight connections and compliance with the approved plans.

5. Final landscaping and stabilization should be per VESCH, 1992 edition, and **Minimum Standard 3.05, Landscaping** in this manual. Establishing vegetation may prove difficult if flow is routed through the facility prior to germination. In such cases, specifying sod or other reinforcements for the basin bottom and low flow channels may be appropriate.

Extended-Detention Volume

Water quality extended-detention basins are designed to allow particulate pollutants to settle out of water quality volume. **Chapter 5, Engineering Calculations** provides calculation procedures for determining the *water quality volume* for a particular watershed, and for sizing the release orifice to provide the required 30-hour draw down. **The water quality volume is the first one-half inch of runoff from the impervious surfaces**.

Channel erosion control extended-detention basins are designed to reduce the rate of discharge such that the velocity is below the critical velocity for the downstream channel. **Chapter 5, Engineering Calculations** provides the calculation procedures for calculating the *channel erosion control volume* for a particular watershed, and for sizing the release structure to provide the required 24-hour draw down. **The channel erosion control volume is the runoff generated from the drainage area or watershed by the 1-year frequency design storm.**

The orifice sizing procedure for extended detention is based on a "*brim*" drawdown. The full design volume is assumed to be in the basin, and the drawdown period is the time it takes to drain that entire volume. In reality, this technique ignores the *routing effect* that occurs in the basin: as the runoff volume accumulates, stormwater is draining into the basin while simultaneously draining out of it. For small storms, the extended-detention volume will never fill to the "brim" and will, therefore, never achieve the maximum drawdown time.

The calculation procedure used to verify the draw down time is presented in **Chapter 5.** The extended-detention volume (in cubic feet) is divided by the maximum release rate (in cubic feet per second), which is based on the maximum hydraulic head associated with the water quality volume, to give the *detention time*, in seconds. Using the maximum release rate, rather than the average release rate, results in a smaller orifice, which helps to compensate for ignoring the routing effect, as discussed above.

Enhanced Extended-Detention Basin: Shallow Marsh

When a higher pollutant removal efficiency is needed, a water quality extended-detention basin can be enhanced by providing a *shallow marsh* in the bottom of the facility. The use of a shallow marsh limits the maximum range of vertical storage in the extended-detention pool to 3 feet above the marsh's water surface elevation. However, the surface area requirements for the shallow marsh will likely force the basin's geometry to broaden at the lower stages, which will compensate for the reduced vertical storage. Extended-detention water surface elevations greater than 3 feet, and the frequency at which those elevations can be expected, are not conducive to the growth of dense or diverse stands of emergent wetland plants.

Similar to the permanent pool of a constructed wetland, the shallow marsh in the bottom of an extended-detention basin should be designed to maximize pollutant removal efficiency. The physical

and hydraulic factors that can influence the pollutant removal efficiency of a shallow marsh are: 1) *volume*, 2) *depth*, 3) *surface area*, 4) *geometry*, and 5) *hydraulic residence time*. In addition, careful attention should be given to the landscaping plan (refer to **Minimum Standard 3.09, Constructed Wetland** for design criteria regarding the establishment of vegetation in a shallow marsh.

The following criteria are general guidelines. The depth of the treatment volume and amount of surface area varies with each site and the intended secondary functions of the facility (i.e., providing habitat, aesthetics, etc.).

1. **Volume–**

The pool volume of an extended-detention shallow marsh varies with the water quality volume. The water quality volume (WQV), as defined by Virginia Stormwater Management regulations, is the **first one-half inch of runoff, multiplied by the area of impervious surface**. The target pollutant removal efficiency of an *enhanced* extended-detention basin, as presented in **Table 3.07-1**, is based on 2.0 times the WQV. The shallow marsh pool volume represents 1.0 × WQV and the extended-detention volume represents an additional 1.0 × WQV. The pollutant removal efficiency is directly related to the percentage of runoff available to be treated. If it is assumed that all of the rainfall that hits impervious surfaces turns into runoff (ignoring minor losses such as evaporation, depression storage, etc.), then a design volume of 2.0 × WQV represents a design storm of 1 inch of rainfall. Based upon available rainfall data from the Washington, D.C. area, 1 inch of rainfall represents approximately 85% of all runoff producing storm events (MWCOG, 1992). Therefore, 2.0 × WQV (or 1 inch of rainfall from impervious surfaces) represents a significant percentage of runoff producing events.

2. **Depth–**

The treatment volume of a shallow marsh should occupy different depth zones, as shown in **Table 3.07-2**, to maximize the physical and biological processes that occur within the marsh. Three basic depth zones should be used: a) *deep pools*, b) *low-marsh*, and c) *high-marsh*.

a. Deep pool areas should be 1.5 to 4 feet deep and may consist of 1) *sediment forebays*, 2) *micro-pools*, and 3) *deep water channels*.

1. A sediment forebay is highly recommended in a shallow marsh. It should be constructed near incoming pipes or channels to reduce the velocity of incoming runoff, trap course sediments, and spread the runoff evenly over the marsh area. The forebay should be constructed as a separate cell from the rest of the marsh, with maintenance access provided to simplify cleaning with heavy equipment (refer to **Minimum Standard 3.04, Sediment Forebay**).

2. A micro-pool should be a standard component of the extended-detention shallow marsh. The purpose of a micro-pool is to create sufficient depth near

the outlet to help reduce clogging of the extended detention orifice. This will allow for a reverse-sloped pipe to extend into the marsh below the pool surface elevation but above the pool bottom which helps to prevent clogging, since a typical marsh environment consists of floating plant debris and possible sediment and organic accumulation on the bottom. Micro-pools also provide open water areas to attract plant and wildlife diversity (refer to the **Overflow** discussion later in this section).

3. Deep water channels provide an opportunity to lengthen the flow path to avoid seasonal short-circuiting (refer to the **Geometry** discussion later in this standard.)

b. Low-marsh zones range in depth from 6 to 18 inches.

c. High-marsh zones range in depth from 0 to 6 inches. The high-marsh zone will typically support the greatest density and diversity of emergent plant species.

3. **Surface Area–**

At a minimum, the surface area of an extended-detention shallow marsh should be sized to equal 1% of the contributing drainage area. The recommended surface area allocation for the different depth zones is presented in **Table 3.07-2** (MWCOG, 1992). Note that the surface area criteria may create a conflict with the volume allocations. If this happens, the designer is reminded that these are recommendations. **The criteria that establish the largest permanent pool should be used**.

4. **Geometry–**

The geometry of the shallow marsh must be carefully designed to avoid *short-circuiting*. Meandering, rather than straight line flow is desirable. Maximum pollutant removal efficiencies will be achieved due to the increased contact time associated with the longest possible flow path through the marsh. A length-to-width ratio of 2:1 through the marsh should be maintained (see **Figure 3.07-4**). The length-to-width ratio is calculated by dividing the straight line distance from the inlet to the outlet by the marsh's average width.

TABLE 3.07 - 2
Recommended Allocation of Surface Area and Treatment Volume for Depth Zones

Depth Zone	% of Surface Area	% of Treatment Volume
Deep Water 1.5 to 4 feet in depth (forebay and micro-pool)	20	40
Low Marsh 0.5 to 1.5 feet in depth	40	40
High Marsh 0 to 0.5 feet	40	20

(Adapted from MWCOG, 1992)

5. **Hydraulic Residence Time–**

The *hydraulic residence time* is the shallow marsh pool volume divided by the average outflow discharge rate. The longer the residence time, the higher the pollutant removal efficiency (Driscoll, 1983, Kulzer, 1989).

In theory, by using 1.0 x WQV in sizing the shallow marsh volume, the smaller storms (those producing ½ inch of runoff or less) will displace the pool volume of the marsh. However, larger treatment volumes (such as 2 or 3 x WQV), compared with the watershed size, will provide longer residence times and greater efficiencies. In certain situations, increasing the target pollutant removal efficiency by using a higher water quality volume multiplier to size the marsh volume may be acceptable. However, the challenge will be to provide the recommended depth zone allocations for the allocated percentages of surface area and treatment volumes, as previously discussed.

<u>Base Flow</u>

The presence of a *base flow* makes the design of an extended-detention control structure difficult. If the extended-detention orifice is sized for the *wet weather base flow*, then the dry weather control is compromised because the release rate is too high. If the orifice is undersized to maintain the *dry weather control*, then the extended-detention pool may remain full of water during the wet weather season; this essentially eliminates the extended-detention volume by creating an undersized permanent pool (1.0 x WQV). When seasonal base flow is present, an adjustable orifice should be provided in the control structure to maintain the marsh volume.

The presence of a base flow and the associated potential for erosion within the basin should be considered in the design. Ideally, base flow, or *low flows*, should be spread out so that they *sheet flow*

across the bottom of the basin. Due to maintenance difficulties and undesirable insect breeding associated with standing water, some localities may have ordinances that require *low-flow channels* (or *trickle ditches*) to carry base flows. If an *impervious* ditch is used to convey base flows, it should be designed to overflow during storm events and spread the runoff across the basin floor. The use of gabion baskets or riprap, instead of concrete, may provide the advantage of slowing the flow, encouraging spillover onto the basin floor. **Generally, an impervious low-flow channel is NOT recommended in a stormwater management water quality basin, as its use is contrary to the basin's water quality function**.

Local ordinances should be reviewed for specific requirements relating to low-flow or base-flow channels in dry detention basins.

Overflow

Similar to a constructed stormwater wetland, an extended-detention overflow system should be designed to provide adequate overflow or bypass for a full range of design storms. For an *enhanced* extended-detention basin, the overflow system should pass the full range of design storms with no more than 3 feet of hydraulic head above the shallow marsh.

Sediment Forebay

A sediment forebay will help to postpone overall basin maintenance by trapping incoming sediments at a specified location. The forebay should be situated and designed per **Minimum Standard 3.04, Sediment Forebay**. Usually, a sediment forebay is placed at the outfall of the incoming storm drain pipes and positioned to ensure access for maintenance equipment.

A sediment forebay enhances the pollutant removal efficiency of a basin by trapping the incoming sediment load in one area where it can be easily monitored and removed. For an *enhanced* extended-detention basin, the sediment forebay is included in the deep pool allocations of the surface area and storage volume. The target pollutant removal efficiency of an extended-detention basin, as listed in **Table 3.07-1**, is predicated on using a sediment forebay at the inflow points of the basin.

Liner to Prevent Infiltration

Extended-detention basins should have negligible infiltration rates through the bottom of the basin. Infiltration will impair the proper functioning of the basin and may contaminate groundwater, and in areas of Karst, may cause collapse. For an *enhanced* extended-detention basin, excessive infiltration may prevent the shallow marsh from holding water. If infiltration is anticipated, and the area is not suspected to be underlain by Karst, than an infiltration facility, rather than a detention water quality BMP, should be used **or** a liner should be installed in the basin to prevent infiltration.

When using a liner, the following recommendations apply:

1. A clay liner should have a minimum thickness of 12 inches and should comply with the specifications provided in **Table 3.07-3**.

2. A layer of compacted topsoil (minimum 6 to 12 inches thick) should be placed over the liner before seeding with an appropriate seed mixture (refer to VESCH, 1992 edition)

3. Other liner types may be used if supporting documentation is provided verifying the liner material's performance.

TABLE 3.07 - 3
Clay Liner Specifications

Property	Test Method (or equal)	Unit	Specification
Permeability	ASTM D-2434	*cm/sec*	1×10^{-6}
Plasticity Index of Clay	ASTM D-423 & D-424	%	Not less than 15
Liquid Limit of Clay	ASTM D-2216	%	Not less than 30
Clay Particles Passing	ASTM D-422	%	Not less than 30
Clay Compaction	ASTM D-2216	%	95% of Standard Proctor Density

Source: City of Austin, 1988

Access

A 10 to 12 foot wide access road with a maximum grade of 12% should be provided to allow vehicular access to both the outlet structure area and at least one side of the basin. The road's surface material should be selected to support the anticipated frequency of use and vehicular load without excessive erosion or damage.

Landscaping

A qualified individual should prepare the landscape plan for an extended-detention basin. Appropriate shoreline fringe, riparian fringe and floodplain terrace vegetation must be selected to correspond with the expected frequency and duration of inundation. Additional criteria for landscaping may be found in **Minimum Standard 3.05, Landscaping**. For establishment of vegetation in the marsh area, refer to **Minimum Standard 3.09, Constructed Wetland**.

The vegetation should be planted in soil that is appropriate for the plants selected. Soil tests showing the adequacy of the soil or a soil enhancement plan should be submitted with the overall basin design.

The soil substrate must be soft enough to permit easy installation of the plants. If the basin soil has been compacted or vegetation has formed a dense root mat, the upper 6 inches of soil should be disked before planting. If soil is imported, it should be laid at least 6 inches deep to provide sufficient depth for plant rooting to occur.

Buffer Zone

A vegetated buffer strip should be maintained beside the basin. The strip should be a minimum of 20 feet wide, as measured from the maximum water surface elevation. Refer to **Minimum Standard 3.05, Landscaping**.

FIGURE 3.07 - 4
Flow Path/Short-Circuiting

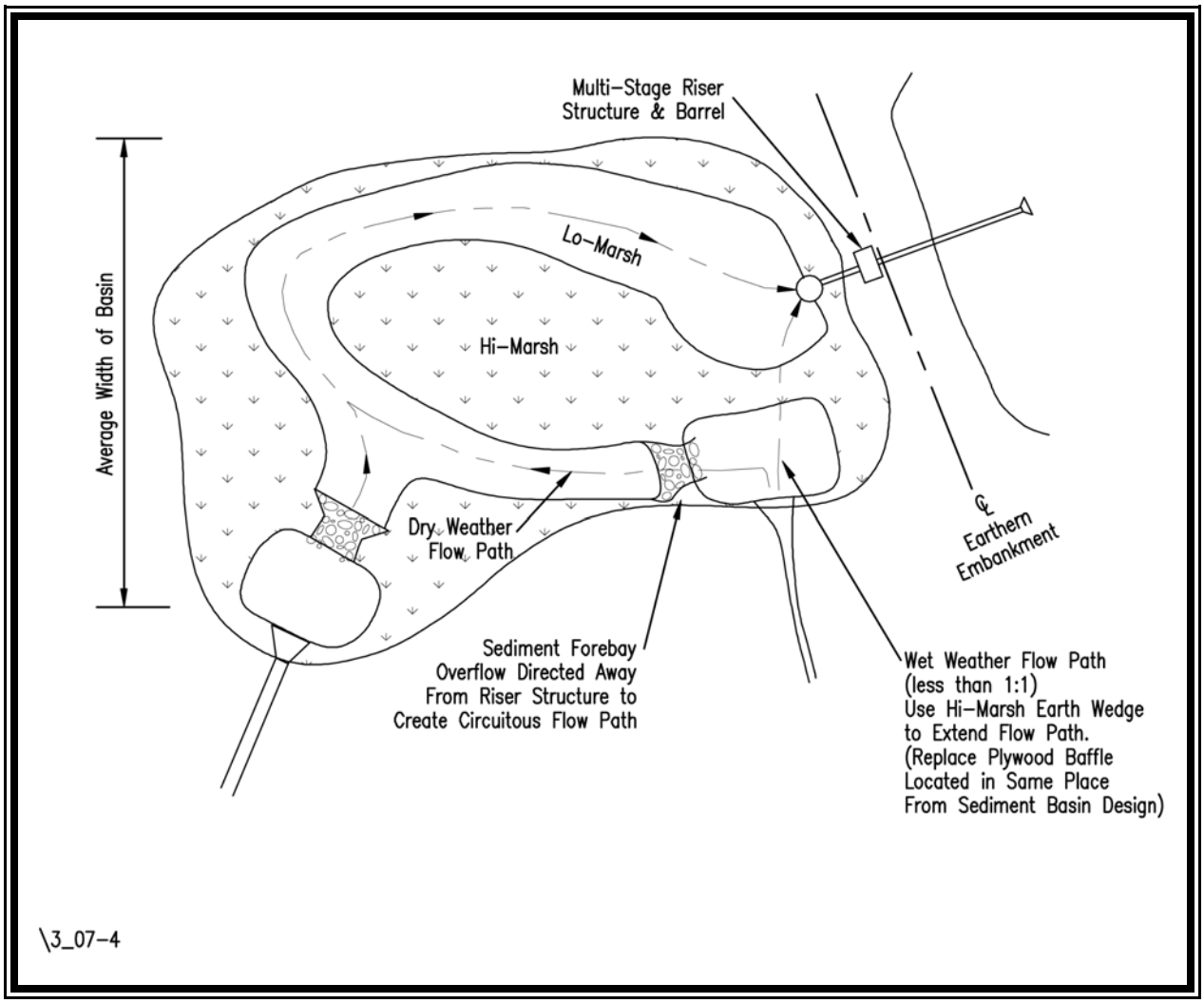

Construction Specifications

The construction specifications for stormwater extended-detention and *enhanced* extended-detention basins outlined below should be considered minimum guidelines. More stringent or additional specifications may be required based on individual site conditions.

Overall, widely accepted construction standards and specifications for embankment ponds, such as those developed by the USDA Soil Conservation Service or the U.S. Army Corps of Engineers, should be followed to build an impoundment.

Further guidance can be found in Chapter 17 of the Soil Conservation Service's Engineering Field Manual. Specifications for the work should conform to methods and procedures specified for installing earthwork, concrete, reinforcing steel, pipe, water gates, metal work, woodwork and masonry and any other items that apply to the site and the purpose of the structure. The specifications should also satisfy any requirements of the local plan approving authority.

The following minimum standards contain guidance and construction specifications for various components of these facilities: **3.01, Earthen Embankment**; **3.02, Principal Spillway**; **3.03, Vegetated Emergency Spillway**; **3.04, Sediment Forebay**; **3.05, Landscaping**, and **3:09, Constructed Wetland**.

Maintenance and Inspections

The following maintenance
and inspection guidelines are not intended to be all-inclusive. Specific facilities may require other measures not discussed here. The engineer is responsible for determining if any additional items are necessary.

Inspecting and maintaining the structures and the impoundment area should be the responsibility of the local government, a designated group such as a homeowner association, or an individual. A specific maintenance plan should be formulated outlining the schedule and scope of maintenance operations.

General Maintenance

Maintenance and inspection guidelines found in the following minimum standards also apply: **3.01, Earthen Embankment**; **3.02, Principal Spillway**; **3.03, Vegetated Emergency Spillway**; **3.04, Sediment Forebay**, and **3.05, Landscaping**.

Vegetation

The basin's side slopes, embankment and emergency spillway should be mowed at least twice a year to discourage woody growth. More frequent mowing may be necessary in residential areas for aesthetic purposes.

Dry extended-detention basins may have soggy bottoms, making mowing costly and difficult. The use of water-tolerant, hardy, and slow growing grass is recommended for the bottom of these basins. **Vegetation is preferred to an impervious low-flow channel since the channel may interfere with the pollution removal capabilities of the basin**. The designer should be aware of local program requirements, as some localities require low-flow channels.

Specific plant communities may require different levels of maintenance. Upland and floodplain terrace areas, grown as meadows or forests, require very little maintenance, while aquatic or emergent vegetation may need periodic thinning or reinforcement plantings. Note that after the first growing season it should be obvious if reinforcement plantings are needed. If they are, they should be installed at the onset of the second growing season after construction.

Research indicates that for most aquatic plants the uptake of pollutants is stored in the roots, not the stems and leaves (Lepp 1981). Therefore, aquatic plants should not require harvesting before winter plant die-back. There are still many unanswered questions about the long term pollutant storage capacity of plants. Possible aquatic and emergent plant maintenance recommendations may be presented in the future.

Debris and Litter Removal

Debris and litter will accumulate near the inflow points and around the outlet control structure. Such material should be removed periodically. Significant accumulation can clog the low-flow outlet and the upper control openings.

Sediment Removal

Sediment deposition should be continually monitored in the basin. Removal of accumulated sediment is extremely important. A significant accumulation of sediment impairs the pollutant removal capabilities of the basin by reducing the available storage for the water quality volume and/or reducing the available volume for the shallow marsh. In addition, accumulated sediment in the bottom of a basin creates unsightly conditions and chokes out established vegetation.

Unless unusual conditions exist, it is anticipated that accumulated sediment will need to be removed from the basin every 5 to 10 years (MWCOG, 1987). More frequent cleaning of the area around the low flow or extended-detention orifice may be required. The use of a sediment forebay with access for heavy equipment will greatly simplify the removal process. **During maintenance procedures,**

ensure that any pumping of standing water or dewatering of dredged sediments complies with the VESCH, 1992 edition, and any local requirements.

Owners, operators, and maintenance authorities should be aware that significant concentrations of heavy metals (e.g., lead, zinc and cadmium) and some organics, such as pesticides, may be expected to accumulate at the bottom of a basin. Testing of sediment, especially near points of inflow, should be conducted regularly and **before disposal** to find the leaching potential and level of accumulation of hazardous materials. Disposal methods must comply with the health department requirements of the local government.

Inspections

An extended-detention basin and its components should be inspected annually to ensure that they operate in the manner originally intended. If possible, inspections should be conducted during wet weather to determine if the extended-detention time is being achieved. Inspections should be conducted by a qualified individual following the checklist provided in **Chapter 3 Appendix**.

REFERENCES

American Society of Civil Engineers. "Stormwater Detention Outlet Control Structures." Task Commission on the Design of Outlet Control Structures. New York, NY:ASCE, 1985.

Brater, E.F. and H.W. King. Handbook of Hydraulics. 6th ed. New York: McGraw Hill Book Company, 1976.

Chesapeake Bay Local Assistance Department (CBLAD). Local Assistance Manual: A Guide for the Development of Local Programs in Order to Comply with the Chesapeake Bay Preservation Act. Richmond, Virginia: November 1989.

Debo, T.N. and A.J. Reese. "Determining Downstream Analysis Limits for Detention Facilities." Proceedings for NOVATECH 92, International Conference of Innovative Technologies in The Domain of Urban Storm Water Drainage. Lyon, France, 1992.

Debo, T.N. and Reese, A. J. Municipal Stormwater Management. 1995.

Federal Highway Administration. "Debris-Control Structures." Hydraulic Engineering Circular No. 9, 1971.

Federal Highway Administration. Retention, Detention and Overland Flow for Pollutant Removal from Highway Stormwater Runoff: Interim Guidelines for Management Measures. Pub. N FHWA/RD-87/056. McLean, Virginia: March, 1988.

Galli, J. Analysis of Urban BMP Performance and Longevity in Prince George's County, Maryland. Washington, D.C.: Metropolitan Washington Council of Governments (MWCOG), August, 1992.

James, W.P., J.F. Bell and D.L. Leslie. "Size and Location of Detention Storage," ASCEJ of Water Resources Planning and Management, Vol. 113, No. 1, 1987.

Jones, J.E. "Multipurpose Stormwater Detention Ponds." Public Works, 1990.

Maryland Department of Natural Resources (Md. DNR). Guidelines for Constructing Wetland Stormwater Basins. Annapolis, Maryland: Water Resources Administration, March, 1987.

Maryland Department of Natural Resources (Md. DNR). Wetland Basins for Stormwater Treatment; Discussion and Background. Annapolis, Maryland: Water Resources Administration, undated.

McCuen, R.H. "Design Accuracy of Stormwater Detention Basins." Technical Report, Department of Civil Engineering, University of Maryland, 1983.

Northern Virginia Planning District Commission. Northern Virginia BMP Handbook. 1992.

Perham, R.E. "Floating Debris Control: A Literature Review." Hanover, NH: U.S. Army CREL, 13, 1987.

Poertner, H.G. "Practices in the Detention of Urban Stormwater Runoff." American Public Works Association, OWWR Proj. C-3380, 1974.

Schueler, T.R., P.A. Kumble, and M.A. Heraty, A Current Assessment of Urban Best Management Practices. Washington, D.C.: Metropolitan Washington Council of Governments (MWCOG), March 1992.

Schueler, T.R. Design of Stormwater Wetland Systems: Guidelines for Creating Diverse and Effective Stormwater Wetland Systems in the Mid-Atlantic Region. Washington, D.C.: Metropolitan Washington Council of Governments, October, 1992.

Schueler, T.R. Controlling Urban Runoff: A Practical Manual for Planning and Designing Urban BMPs. Washington, D.C.: Metropolitan Washington Council of Governments, July, 1987.

Smith, P.H. and J.S. Cook, "Stormwater Management Detention Pond Design Within Floodplain Areas." Trans., Res. Record 1017, 1987.

Stahre, P. and B.Urbonas. "Stormwater Detention." Prentice Hall, 1990.

State of Maryland. "Design Procedures for Stormwater Management Detention Structures." Department of the Environment, Sediment and Stormwater Division, 1987.

The Virginia Department of Conservation and Recreation (DCR). Virginia Erosion and Sediment Control Handbook (VESCH). 3rd. ed. Richmond, Virginia: 1992.

U. S. Department of the Interior, Bureau of Reclamation. Design of Small Dams. 1987.

USDA Soil Conservation Service. Engineering Field Manual.

USDA Soil Conservation Service. National Engineering Handbook.

Washington State Department of Ecology. "Stormwater Management Manual for the Puget Sound Basin." 1992.

Chapter 3.07

Extended Detention Basin – full. Note circuitous flow path.

Enhanced Extended Detention Basin – Shallow Marsh. Note multi-stage weir principal spillway and deep water pool (18” – 48” depth).

Extended-Detention Basin & Enhanced Extended-Detention Basin

Chapter 3.07

Extended Detention Basin – empty.

Extended Detention Basin – full.

Extended-Detention Basin & Enhanced Extended-Detention Basin

MINIMUM STANDARD 3.09

CONSTRUCTED STORMWATER WETLAND

View BMP Images

LIST OF ILLUSTRATIONS

#	FIGURES	PAGE
3.09-1	Constructed Stormwater Wetlands - Plan	3.09-16
3.09-2	Constructed Stormwater Wetlands - Depth Zones	3.09-16
3.09-3	Dry Weather and Wet Weather Flow Paths	3.09-17
3.09-4	Off-line Bypass Structure	3.09-18

#	TABLES	PAGE
3.09-1	Pollutant Removal Efficiency for Constructed Stormwater Wetlands	3.09-2
3.09-2	Recommended Allocation of Surface Area and Treatment Volume for Various Depth Zones	3.09-10
3.09-3	Clay Liner Specifications	3.09-12

MINIMUM STANDARD 3.09

CONSTRUCTED STORMWATER WETLAND

Definition

Constructed stormwater wetlands are manmade shallow pools that create growing conditions suitable for both emergent and aquatic vegetation.

Purpose

Constructed wetlands are intentionally installed on non-wetland sites to enhance the quality of stormwater runoff.

In contrast, *created wetlands* are also intentionally installed on non-wetland sites, but are designed to produce or replace natural functional wetlands and wetland habitats (e.g., for compensatory mitigation projects).

This handbook deals primarily with *constructed wetlands*. Sometimes, a constructed wetland may provide some of the benefits of a created wetland. However, understanding the differences in these two manmade systems is important. For a *natural* or *created wetland*, pre-treatment BMPs, such as erosion controls, presettling basins, biofilters, etc., are used to reduce pollutants entering the wetland to prevent its degradation and clogging. The primary function of a *constructed wetland,* on the other hand, is to provide those same types of pre-treatment functions within the wetland itself. The constructed wetland, therefore, will require maintenance to assure long-term pollutant removal. **It should be noted that the pre-treatment BMPs mentioned above will often simplify or reduce maintenance requirements, as well as enhance and prolong the useful life of a constructed stormwater wetland.**

Water Quality Enhancement

A constructed stormwater wetland can achieve high removal rates of particulate and soluble pollutants (nutrients) through gravitational settling, wetland plant uptake, absorption, physical filtration, and biological decomposition. The pollutant removal efficiency of a constructed wetland is dependent on various design criteria relating to the size and design of the pool area. Other site-specific design features and variations in environmental conditions such as soils, climate, hydrology,

etc. make it difficult to predict the actual pollutant removal efficiency. Monitoring of many stormwater wetland facilities has confirmed the wide range of pollutant removal efficiencies associated with such systems.

Constructed stormwater wetlands operate similar to retention basins, yet their overall performance is expected to be more variable. This may be due to any of the following:

1. The decrease in biological activity associated with seasonal cold weather.

2. The conversion of plant species and densities as the wetland matures and becomes acclimated to various environmental factors such as soils, hydrology, climate, and sediment and pollutant load.

3. The uncertainty of the biological cycling processes of phosphorous in the wetland environment.

The expected pollutant removal rate of constructed stormwater wetlands is provided in **Table 3.09-1**. While the rate may appear low, it reflects the uncertainty of their long-term viability.

TABLE 3.09 - 1
Pollutant Removal Efficiency for Constructed Stormwater Wetlands

Water Quality BMP	Target Phosphorus Removal Efficiency	Impervious Cover
Constructed Wetlands 2.0 x WQ Volume	30%	22 - 37%

Flood Control & Channel Erosion Control

Constructed stormwater wetlands should generally not be used for flood control or stream channel erosion control. This is due to the anticipated water level fluctuations associated with quantity controls. The clearing of vegetation and the addition of impervious surfaces may cause large and sudden surges of runoff during rain events, and may cause less than normal base flows due to lack of groundwater during dry periods. Large, sudden fluctuations in water levels can stress emergent wetland and upland edge vegetation. Most edge vegetation cannot survive drought or saturation extremes, leaving wetland banks exposed to potential erosion. It should be noted that the large surface area requirement for constructed stormwater wetlands will help to minimize the “extreme” water level fluctuations during all but the larger storm events. Also, certain plants can be specified for the upland banks which may be more tolerant to the wet and dry extremes. Therefore, preventing surges whenever possible and designing for gradual increases and decreases in water level is

important for successful constructed wetland design. See **Design Criteria** for further discussion.

(Wetland vegetation can be used to enhance the pollutant removal efficiency of extended-detention flood control and stream channel erosion control facilities by constructing a shallow marsh in their bottoms. See **Minimum Standard 3.07, Extended-Detention and *Enhanced* Extended-Detention Basin**.)

Conditions Where Practice Applies

Drainage Area

The drainage area criteria for a constructed stormwater wetland is similar to that of a retention basin. However, because of their shallow depth, constructed stormwater wetlands may consume two to three times the site area compared with other stormwater quality BMPs (MWCOG, 1992). Vertical (depth) storage is usually not possible in constructed wetlands due to the needs of aquatic plants. Therefore, the maximum watershed size depends on the available area on the site that is suitable for a constructed wetland system.

The minimum watershed drainage area for constructed stormwater wetlands should be 10 acres. However, this minimum should be confirmed based on the watershed's hydrology and the presence of an adequate base flow to support the selected vegetation. Similar to retention basins, a drainage area of 15 to 20 acres or the presence of a dependable base flow is most desirable to maintain a healthy wetland. A clay liner may be necessary to prevent infiltration if losses are expected to be high.

Development Conditions

Constructed stormwater wetlands are suited for both low- and high-visibility sites. However, the aesthetic problems associated with having a natural and free growing landscape feature in an otherwise manicured development setting should be avoided for high-visibility sites. Additional concerns regarding stagnation or excessive infiltration during the dry summer months may also influence the choice of location. Proper planning, design, and maintenance are critical to ensure the pollutant removal capabilities of a constructed wetland and to insure its acceptance by adjacent landowners.

Like retention basins, constructed wetlands are also suited for low- and medium-density residential or commercial developments. However, the land area required for this BMP may limit its use.

Planning Considerations

Constructed stormwater wetlands should be designed to duplicate the functions of natural wetlands, while allowing for ongoing maintenance. The designer faces the difficult task of replicating natural wetland hydrology in a constructed setting, while ensuring easy access for maintenance.

Hydrology

The hydrology of a constructed stormwater wetland is largely influenced by surface runoff. The hydrology, in turn, affects several key characteristics of a stormwater wetland, such as:

1. *Water level fluctuations*. A *constructed stormwater* wetland will experience rapid inundation and drawdown periods with each runoff-producing event.

2. *Permanent pool*. A *natural* wetland may experience seasonal standing water and/or periodic drawdowns. However, a constructed stormwater wetland is engineered to permanently hold a specific volume of water, or at a minimum, maintain pools of water of varying depths. This stored water supports the aquatic and emergent plant regime and maintains the pollutant removal efficiency of the BMP.

3. *Vegetation*. The vegetation diversity in a constructed wetland is established by the landscape plan or volunteer vegetation. The selection of vegetation should be limited to native plant species suitable for the pool depths expected within the different depth zones. Care should be taken to avoid the introduction of exotic or invasive species. The use of appropriate donor soil and wetland mulch will help prevent this problem.

   In contrast, a natural wetland vegetates itself through natural selection based on the growing conditions within it. The existing source of seeds, which is usually enhanced by wildlife, allows for the constant renewal of plant life.

4. *Sediment and pollutant load*. A stormwater wetland is subject to sediment loads, especially from upland pervious areas during the first growing season. During this period, permanent vegetation in the developing watershed is still growing. Without a well-established ground cover, surface sediments can be easily transported by rainfall and resulting runoff. Accumulation of this sediment in the constructed stormwater wetland during the first growing season alone can dramatically alter the topography of the facility, affecting water levels and flow paths. Furthermore, the pollutant load (nutrients and organics) associated with urban runoff and sediments entering a constructed wetland is usually higher than that which enters a natural or undisturbed wetland in undeveloped watershed. Therefore, if the constructed wetland is used to remove pollutants, the water quality within the wetland itself will be decreased. During the planning stage of a facility, the designer should have a good understanding of site-specific runoff constituents and an understanding of their possible effects on the selected vegetation.

Site Conditions

Site conditions, such as property lines, easements, utilities, structures, etc., that may impose constraints on development should be considered when designing a constructed wetland. Local government land use and zoning ordinances may also specify certain requirements.

All facilities should be a minimum of 20 feet from any structure, property line, or vegetative buffer, and 100 feet from any septic tank/drainfield. Local landuse setbacks and other restrictions may apply.

All facilities should be a minimum of 50 feet from any steep slope (greater than 10%). Alternatively, a site-specific geotechnical report must address the potential impact of a constructed stormwater wetland that is to be installed on, or near, such a slope.

Additional considerations are as follows:

1. **Soils–**

   Permeable soils are not suited for constructed stormwater wetlands. A thorough analysis of the soil strata should be conducted to verify its suitability for holding water. In the past, many BMP designs were accepted based upon soils information compiled from available data, such as SCS soil surveys. While such a source may be appropriate for a pre-engineering feasibility study, final design and acceptance **should be based on an actual subsurface analysis and permeability tests**, accompanied by appropriate engineering recommendations. Refer to the references listed at the end of **Minimum Standard 3.10, Infiltration Practices** for additional information on soil analysis techniques.

   The goal of a subsurface analysis is to determine if the soils are suitable for a constructed stormwater wetland. The textural character of the soil horizons and/or strata units within the subsoil profile should be identified to at least 3 feet below the bottom of the facility. This information is used to verify the infiltration rate or permeability of the soil. For constructed stormwater wetlands, water inflow (base flow and groundwater) must be greater than water losses (infiltration and evaporation). If the infiltration rate of the soil is too great, then a constructed wetland may not be an appropriate BMP, or a liner may be required. The soil permeability may be such that the shallow depths of a constructed wetland can be maintained. However, as the depth of the permanent pool increases, the increased head or pressure on the soil may increase the infiltration rate.

   For discussions regarding the appropriate soils for landscaping, see the Landscape section in this standard and **Minimum Standard 3.05, Landscaping**.

2. **Rock–**

The subsurface investigation should also identify the presence of any rock or bedrock layers. The excavation of rock to achieve the proper wetland dimensions and hydrology may be too expensive or difficult with conventional earth moving equipment. However, blasting may open seams or create cracks in the underlying rock that may result in unwanted drawdown of the permanent pool. Blasting of rock is not recommended unless a liner is used.

3. **Karst–**

In regions where Karst topography is prevalent, projects may require a thorough soils investigation and specialized design and construction techniques. Since the presence of karst may affect BMP selection, design, and cost, a site should be evaluated **during the planning phase of the project**.

4. **Existing Utilities–**

Most utility companies will not allow their underground lines and right-of-ways to be submerged under a permanent pool. If such a site must be used, the designer should obtain permission **before designing the BMP**. Note that if the utilities ever require maintenance or repair, the characteristics of the constructed wetland may be irreparably changed or damaged. The cost to move any existing utilities during initial wetland construction should be determined and included in the project's overall construction costs.

Environmental Impacts

Constructed stormwater wetlands are generally located in areas with favorable hydrology. These locations are prone to being environmentally sensitive (low-lying) as well, and may contain existing wetlands, shallow marshes, perennial streams, wildlife habitat, etc., which may be protected by state or federal laws. The owner or designer should review local wetland maps and contact local, state, and federal permitting agencies to verify the presence of wetlands, their protected status, and the suitability of the location for a constructed wetland.

With careful planning, it may be possible to incorporate wetland mitigation into a constructed stormwater wetland. This assumes that the functional value of the existing or impacted wetland can be identified and included, reconstructed, or mitigated for, in the stormwater wetland. The Virginia Department of Environmental Quality should be contacted for more information regarding wetland mitigation.

Sediment Control

A constructed stormwater wetland should not be used as a sediment control facility during site construction. A presettling basin, or forebay, may be constructed above the proposed constructed wetland facility, however, any planting or preparation of the constructed wetland site should occur after the site construction has been completed. This will eliminate any forseeable impact from sediment loads that overwhelm temporary erosion and sediment control measures during storm events.

Maintenance

Constructed stormwater wetlands require periodic maintenance, as does any stormwater BMP. In addition, a constructed wetland will require active management of the hydrology and vegetation during the first few years or growing seasons in order for it to achieve the performance and functions for which it was designed.

Vehicular access and manuvering room in the vicinity of a constructed wetland (and sediment forebay) is necessary to allow for long-term maintenance. In addition, the establishment of an on-site sediment disposal area, properly located and contained, will significantly reduce the cost of routine maintenance and sediment removal. Care must be taken in the disposal of sediment that may contain an accumulation of heavy metals. **Sediment testing is recommended prior to sediment removal to assure proper disposal**.

Design Criteria

This section provides minimum criteria and recommendations for the design of a constructed stormwater wetland intended to comply with the runoff quality requirements of the Virginia Stormwater Management program. It is the designer's responsibility to decide which aspects of the program apply to the particular facility being designed and if any additional design elements are required to insure the long-term functioning of the wetland.

Hydrology and Hydraulics

Chapter 4, Hydrologic Methods and **Chapter 5, Engineering Calculations** should be used to develop the post-developed hydrology of the wetland's contributing watershed, to analyze the hydraulics of the riser and barrel system (if used) and to design the emergency spillway.

The contributing watershed's area should be a minimum of 10 acres and/or there should be an adequate base flow to support the hydrology.

Embankment

The design of the earthen embankment for any impoundmant BMP should comply with **Minimum Standard 3.01, Earthen Embankment**. Specific requirements for geotechnical analysis, seepage control, maximum slopes, and freeboard are particularly appropriate.

Principal Spillway

The design of the principal spillway and barrel system, or weir overflow system, anti-vortex device, and trash racks should comply with **Minimum Standard 3.02, Principal Spillway**. Weir spillways have a large cross-sectional area that can pass a considerable flow rate at low head conditions. Since reducing the depth of ponding in a constructed wetland helps to avoid stressing plant communities, an armored, weir-type spillway may be the most desirable overflow device for a constructed stormwater wetland. Further, the use of an adjustable weir will help maintain the proper water surface elevation during seasonal extremes.

Emergency Spillway

An emergency spillway that complies with **Minimum Standard 3.03, Vegetated Emergency Spillway** should be provided when possible.

Permanent Pool

Sizing a constructed stormwater wetland is based on maximizing its pollutant removal efficiency. The physical and hydraulic factors that influence the wetland's pollutant removal efficiency are the permanent pool *volume*, *depth*, *surface area*, *geometry*, and *hydraulic residence time*. Minimum design criteria are presented below for each of these factors:

1. **Volume –**

The required permanent pool volume of a constructed stormwater wetland is **2 times the water quality volume** (2 ×WQV). The target pollutant removal efficiency shown in **Table 3.09-1** is based on this sizing criteria.

2. **Depth –**

Four depth zones are needed within the permanent pool of a constructed stormwater wetland: a) *deep pool*, b) *low marsh*, c) *high marsh*, and d) *semi-wet* (see **Figure 3.09-2**).

a. The *deep pool* areas of a constructed wetland should be 18 *inches* to 6 *feet* in depth and may consist of 1) *sediment forebays*, 2) *micro-pools*, and/or 3) *deep-water channels*.

   1. *Sediment forebays* are highly recommended in constructed stormwater wetlands. They should be installed at stormwater inflow points to reduce the velocity of

incoming runoff and trap course sediments, and to spread the runoff evenly over the wetland area. The forebay should be constructed as a separate cell from the rest of the wetland and provide easy access for maintenance with heavy equipment. Refer to **Minimum Standard 3.04, Sediment Forebay** for further information.

2. *Micro-pools* offer open water areas to attract plant and wildlife diversity. If a low-flow discharge pipe is used, it should be constructed on a reverse slope and extended into the wetland below the pool surface elevation but above the bottom elevation. This helps to prevent clogging, since a typical wetland environment consists of floating plant debris and possible sediment and organic accumulation at the bottom. (Refer to the **Overflow** discussion later in this section.)

3. *Deep-water channels* provide an opportunity to lengthen the flow path to avoid seasonal short-circuiting (see pool geometry).

b. The *low-marsh zone* ranges in depth from 6 to 18 inches.

c. The *high-marsh zone* ranges in depth from 0 to 6 inches. Usually, this zone will support the greatest density and diversity of emergent plant species.

d. The *semi-wet zone* refers to the area that, during normal, non-rainfall periods, is above the pool, but is inundated during storm events for a period of time, depending on the amount of rainfall, and the hydraulics of the overflow device.

Note: The low-marsh, high-marsh, and semi-wet zones are useful as a perimeter shelf 10 to 15 feet wide. This shelf, or aquatic bench, can serve as a safety feature to keep children away from the open water deep pool areas. Also, as a secondary benefit, a heavily vegetated perimeter will help to discourage geese from using the facility as a permanent habitat.

The recommended surface area allocation for these depth zones is presented in **Table 3.09-2.**

3. **Surface Area–**

At a minimum, the pool surface area of a constructed stormwater wetland should equal 2% of the size of the contributing watershed. Recommended surface area allocations for different depth zones are shown in **Table 3.09-2** (MWCOG, 1992). Note that if the surface area criteria conflict with the volume allocations, the surface area allocations are more critical to an effective design.

4. **Geometry–**

The geometry of the constructed stormwater wetland must be designed to avoid short-circuiting. Maximum pollutant removal efficiency is achieved with the longest possible flow path, since this increases the contact time over the wetland area. The minimum length-to-width ratio of the pool should be 1:1 in wet weather and 2:1 during dry weather (see **Figure 3.09-3**).

TABLE 3.09-2
Recommended Allocation of Surface Area and Treatment Volume for Various Depth Zones

Depth Zone	% of Surface Area	% of Treatment Volume
Deep Water 1.5 to 6 feet deep	10	20
Low Marsh 0.5 to 1.5 feet deep	40	*
High Marsh 0 to 0.5 feet deep	50	*
		* combined marsh area = 80% of treatment volume

Adapted from MWCOG, 1992

The **wet weather** *length-to-width ratio* is calculated by dividing the straight line distance from the inlet to the outlet by the wetland's average width. The **dry weather** *length-to-width ratio* is calculated by dividing the dry weather flow path length by the wetland's average width. Note that the dry weather flow path is created by constructing high marsh areas perpendicular to the straight line flow path described above. These marsh areas act as submerged berms and lengthen the effective flow path.

5. **Hydraulic Residence Time–**

The hydraulic residence time is the permanent pool volume, divided by the average outflow discharge rate. The longer the residence time, the higher the pollutant removal efficiency (Driscoll, 1983, Kulzer, 1989).

Using *2 × WQV* to size the permanent pool means that smaller storms (*1 × WQV* or *½-in.*) will displace only half of the pool volume of the wetland, thus providing for extended residence times. Larger treatment volumes with respect to the watershed size (*3 × WQV*) will provide longer residence times and, therefore, greater efficiencies. In certain situations, using these larger volumes and efficiencies may be acceptable, but the decision should be made carefully. The associated challenge is to provide the recommended surface area allocations for the different depth zones as previously discussed.

<u>Overflow</u>

Providing flood control and/or channel erosion control within a constructed stormwater wetland creates a hydrologic regime that is very difficult to adapt to in the landscaping plan, due to extreme water depth fluctuations. If a constructed wetland is to serve as a quantity control BMP, it should

be designed to provide adequate overflow or bypass for the full range of design storms with as little vertical ponding depth as possible. The hydraulic head needed to pass a design storm is a function of the relationship between the constructed wetland surface area, the geometry of the overflow structure, and the allowable discharge (refer to **Chapter 5, Engineering Calculations**). Outlet structures should be sized to pass the design storms (up to the 10-year storm) with a maximum of 2 feet of water ponded above the wetland pool.

In a stormwater wetland designed for water quality enhancement only, a bypass or diversion structure may be used to prevent sudden surges of runoff from flushing through the wetland (see **Figure 3.09-4**). This establishes the constructed wetland as an off-line facility. If site constraints prevent the use of an off-line facility, then the overflow should be designed to pass the full range of design storms with as little head as possible. An oversized riser and barrel system or a weir structure installed along the berm at the outlet may be used. Refer to **Minimum Standard 3.02, Principal Spillway** for outlet structure design criteria.

Sediment Forebay

Sediment forebays should be installed and designed per **Minimum Standard 3.04, Sediment Forebay**. Generally, they should be constructed at the outfall of incoming storm drain pipes or channels and should be made accessible for maintenance equipment. To lower maintenance costs, an on-site disposal area should be included in the design. Sediment forebays enhance the pollutant removal efficiency of BMPs by containing incoming sediment in one area, which also simplifies monitoring and removal. Therefore, the target pollutant removal efficiency of a constructed stormwater wetland, as presented in **Table 3.09-1**, is predicated on the use of sediment forebays at all inflow points.

Liner to Prevent Infiltration

Constructed stormwater wetlands should have negligible infiltration rates through their bottom. Infiltration impairs the proper functioning of any retention facility by lowering its pool elevation. If infiltration is expected, then a retention BMP must **not** be used, **or** a liner should be installed to prevent infiltration. If a clay liner is used, the specifications provided in **Table 3.09-3** apply and the following are recommended:

1. A clay liner should have a minimum thickness of 12 inches.

2. A layer of compacted topsoil (6 to 12 inches thick, minimum) should be placed over the liner.

3. Other liners may be used if adequate documentation exists to show that the material will provide the required performance.

Safety

The side slopes of a constructed stormwater wetland should be no steeper than 3H:1V. Also, local ordinances may require fencing of deep pool areas next to the shoreline as an additional safety measure. Dense plantings of shoreline fringe vegetation can serve as a safety feature by discouraging access to the pool areas.

TABLE 3.09 - 3
Clay Liner Specifications

Property	Test Method (or equal)	Unit	Specification
Permeability	ASTM D-2434	*cm/sec*	1×10^{-6}
Clay Plasticity Index	ASTM D-423 & D-424	%	Not less than 15
Liquid Limit of Clay	ASTM D-2216	%	Not less than 30
Clay Particles Passing	ASTM D-422	%	Not less than 30
Clay Compaction	ASTM D-2216	%	95% of Standard Proctor Density

Source: City of Austin, 1988

Access

A 10 to 12-foot wide access road with a maximum grade of 12% should be provided to allow vehicular access to the outlet structure area, at least one side of the basin, and the sediment forebay(s). The road's surface should be selected to support the anticipated frequency of use and vehicular load without excessive erosion or damage.

Landscaping

A qualified individual should prepare the landscape plan for a constructed stormwater wetland. Appropriate aquatic, emergent, shoreline fringe, transitional, and floodplain terrace vegetation must be selected to correspond with the expected frequency, duration, and depth of inundation.

The landscaping plan for a constructed wetland is based on the projected depth zones and onsite soil analysis, and should contain the following:

1. **The location, quantity, and propagation methods of plant species and grasses for the stormwater wetland and its buffer.**

The location of plants is based on the depth zones in the wetland and the innundation tolerance of the plant species. Planting zones of uniform depth should be identified for each species selected.

Only one-half of the low- and-high marsh depth zones need to be planted. If the appropriate planting depths are achieved, the entire wetland should be colonized within three years. At least 5 to 7 emergent wetland species, including a minimum of two species for each of the marsh depth zones (high and low), should be used. Selections should be based on wildlife food value, depth tolerance, price, commercial availability and/or shade limitations. Certain species, such as cattails, should be selected with caution. Although they may provide excellent pollutant removal characteristics, they can be invasive and may eventually crowd out other species.

A constructed stormwater wetland does not contain a seed bank, nor does it have an existing natural seed transport cycle as found in native wetlands. While the use of donor soil from disturbed or dredged sites may provide a seed bank, these opportunities may not be readily available. Therefore, the most common and convenient technique for establishing wetland vegetation in a constructed system is to transplant nursery-grown stock. Other propagation techniques (which are outside the scope of this manual) may also prove successful, but special growing conditions must exist.

2. **Instructions for site preparation**.

The soil in which the vegetation is planted should be appropriate for the wetland plants selected. Soil tests showing the adequacy of the soil, or a soil enhancement plan should be submitted with the wetland design.

The soil substrate must be soft enough to permit easy insertion of the plants. If the basin soil is compacted or vegetation has formed a dense root mat, the upper 6 inches of soil should be disked before planting. If soil is imported, it should be laid at least 4 inches deep to provide sufficient depth for plant rooting.

3. **A schedule for transplanting emergent wetland stock**.

The window for transplanting emergent stock extends from early April to mid-June. Dormant rhizomes can be planted in fall or winter. To insure availability, ordering stock 3 to 6 months in advance may be necessary.

4. **Planting procedures**.

A landscape plan should describe any special procedures for planting nursery stock. Most emergent plants may be planted in flooded or dry conditions. If planting is done in dry conditions, then instructions should be included for flooding the wetland immediately following installation.

Proper handling of nursery stock is crucial. The roots must be kept moist to prevent damage. Plants received from the nursery will be in peat pots or bare-rooted. Bare-rooted plants will have some form of protection to keep the roots moist and may be kept for several days, but out of direct sunlight. For the maximum chance of success, all nursery stock should be planted as soon as possible. A minimum acceptable success rate of the plantings should be specified in the plan.

5. **A maintenance and vegetation reinforcement schedule for the first three years after construction**.

Sometimes additional stabilization of the basin area may be necessary to ensure that the vegetation becomes established and mature prior to the erosion of the planting soil. Annual grasses may be used for this purpose. However, the specified application rates in the Virginia Erosion and Sediment Control Handbook (VESCH), 1992 edition: Temporary Seeding Spec. 3.31 should be reduced to help prevent these grasses from competing with other plants, particularly those emerging from bulbs and rhizomes. Overall, permanent seeding (VESCH Spec. 3.32) should be prohibited in zones 1 through 4, as the grasses will indefinitely compete with the wetland plants. Refer to the Maintenance and Inspection section in this standard for more information.

Additional considerations and criteria for developing a landscape plan can be found in **Minimum Standard 3.05, Landscaping**.

Buffer Zones

A minimum 20-foot wide vegetated buffer, measured from the maximum water surface elevation, should be maintained beside the wetland. Refer to **Minimum Standard 3.05, Landscaping**.

Construction Specifications

Overall, widely accepted construction standards and specifications, such as those developed by the USDA Soil Conservation Service or the U.S. Army Corps of Engineers for embankment ponds and reservoirs, should be followed to build the impoundment.

Further guidance can be found in Chapter 17 of the Soil Conservation Service's Engineering Field Manual. Specifications for the work should conform to methods and procedures specified for earthwork, concrete, reinforcing steel, pipe water gates, metal work, woodwork and masonry and any other items that apply to the site and the purpose of the structure. The specifications should also satisfy any requirements of the local government.

Guidance and construction specifications in the following minimum standards also apply for various components of the facility: **3.01, Earthen Embankment**; **3.02, Principal Spillway**; **3.03, Vegetated Emergency Spillway**; **3.04, Sediment Forebay**; and **3.05, Landscaping**.

Maintenance and Inspections

A constructed stormwater wetland may be maintained without a permit from the U. S. Army Corps of Engineers or the Virginia Department of Environmental Quality (Va. DEQ).

Any pre-treatment facility or diversion structure should be inspected and maintained regularly to remove floatables and any large debris. Sediment should be removed from the forebay every 3 to 5 years, or when 6 to 12 inches have accumulated, whichever comes first. To clean the forebay, draining or pumping and a possible temporary partial drawdown of the pool area may be required. Refer to the VESCH, 1992 edition for proper dewatering methods. A predesignated spoil area, away from the wetlands, should be used.

The constructed stormwater wetland should be inspected at least twice a year in the first three years after construction, during both the growing and non-growing seasons,for vegetative establishment. Inspectors should document plant species distribution and fatality rates and verify compliance with the landscaping specifications. Also, sediment accumulation, water elevations, and the condition of the outlet should be documented. Records should be kept to track the wetland's health over time.

Management of Wetland Vegetation

The constructed wetland and its buffer may need a *reinforcement planting* at the onset of the second growing season after construction. The size and species of plants to be used should be based on the growth and survival rate of the existing plants at the end of their first growing season. Controlling the growth of certain invasive species, such as cattail and phragmites, may also be necessary. These plants can be very hard to contain if they are allowed to spread unchecked. The best strategy may be to design for a wide range of distinct depth zones.

Research shows that for most aquatic plants the bulk of the pollutants is stored in the roots, not the stems and leaves (Lepp 1981). Therefore, harvesting before winter dieback is unnecessary. Many unanswered questions remain concerning the long-term pollutant storage capacity of plants. Additional plant maintenance recommendations may be presented in the future, as such information becomes available.

The embankment and BMP access road should be mowed biannually, at a maximum, to prevent the growth of trees. Otherwise, the buffer and upland areas should be allowed to grow in meadow conditions.

FIGURE 3.09 - 1
Constructed Stormwater Wetlands - Plan

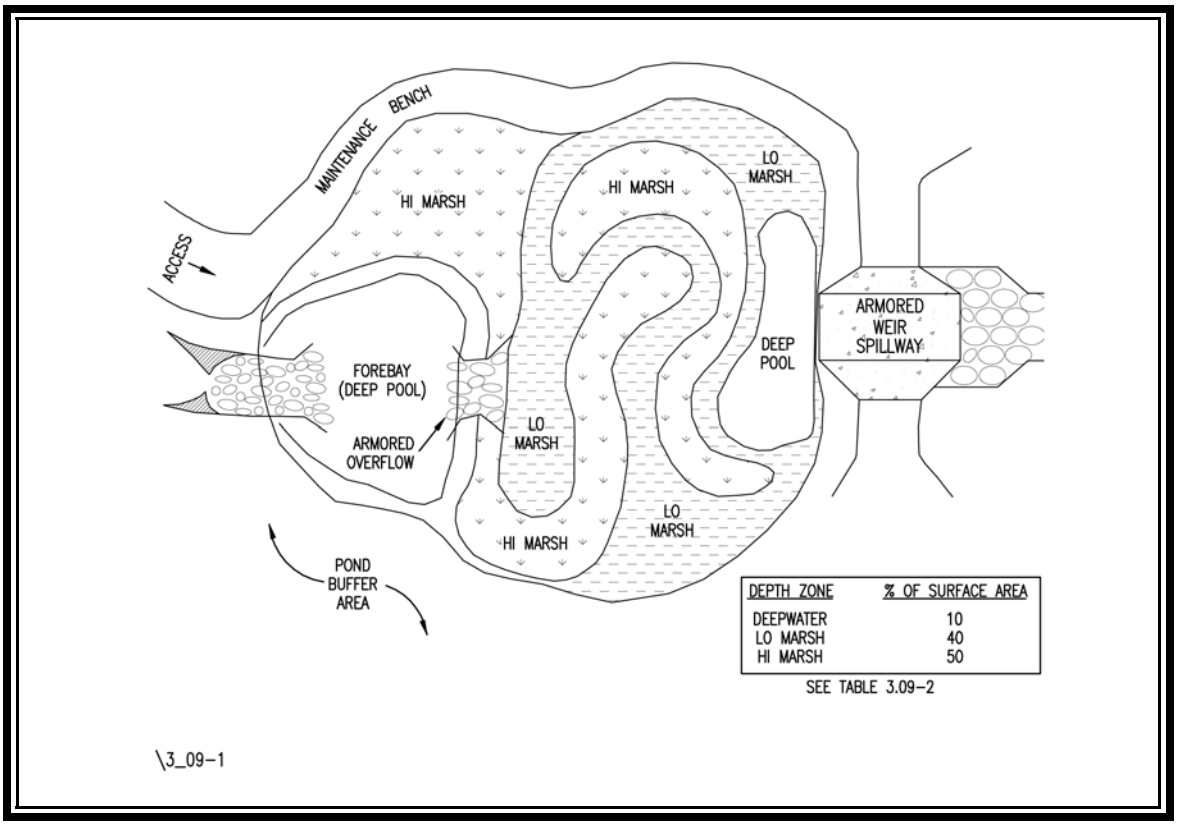

FIGURE 3.09 - 2
Constructed Stormwater Wetlands - Depth Zones

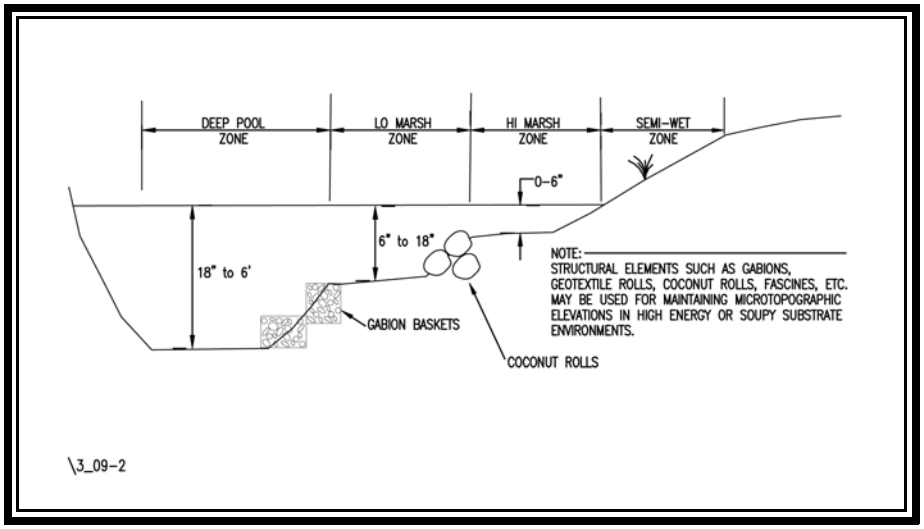

FIGURE 3.09 - 3
Dry Weather and Wet Weather Flow Paths

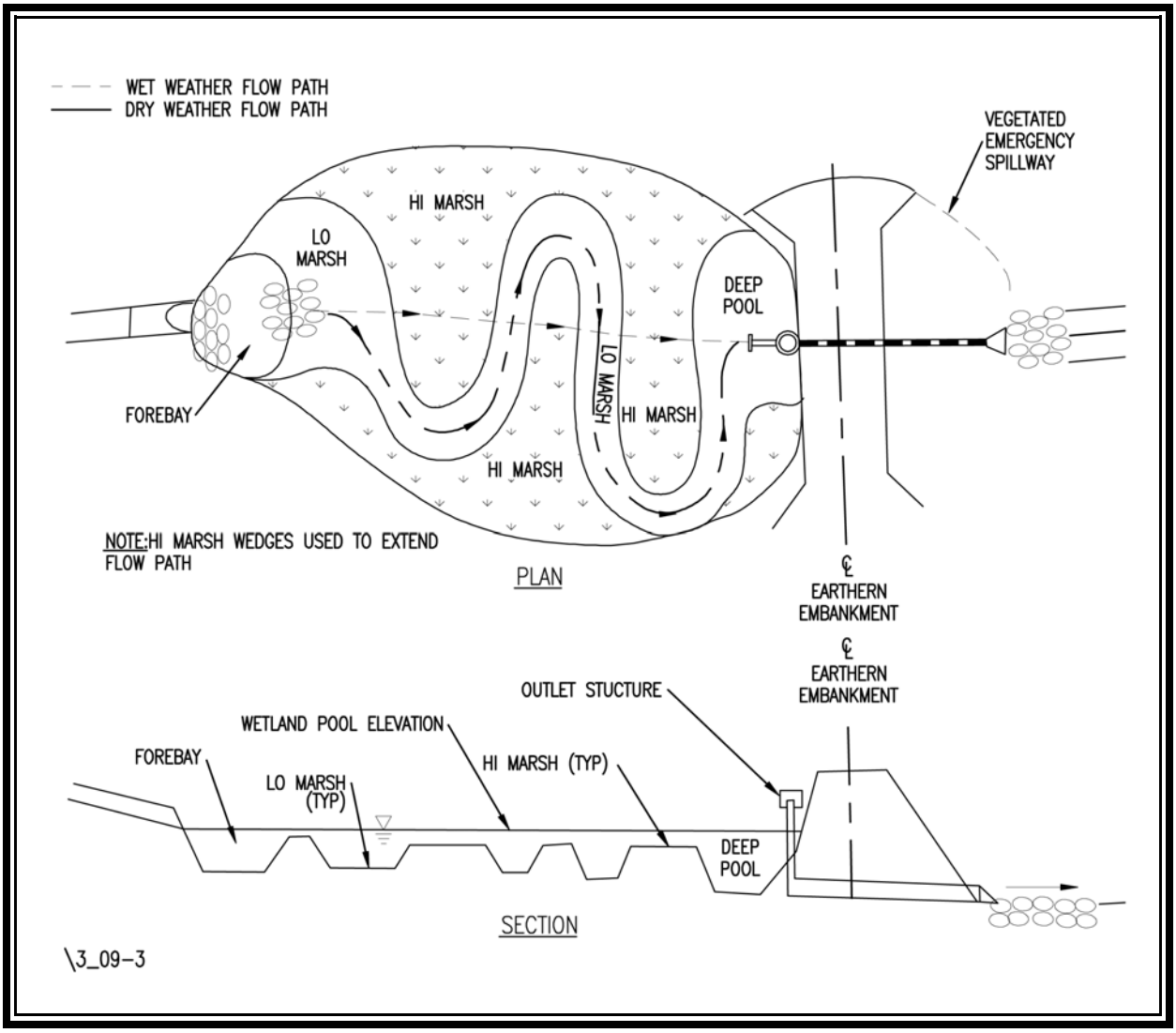

FIGURE 3.09 - 4
Off-line Bypass Structure

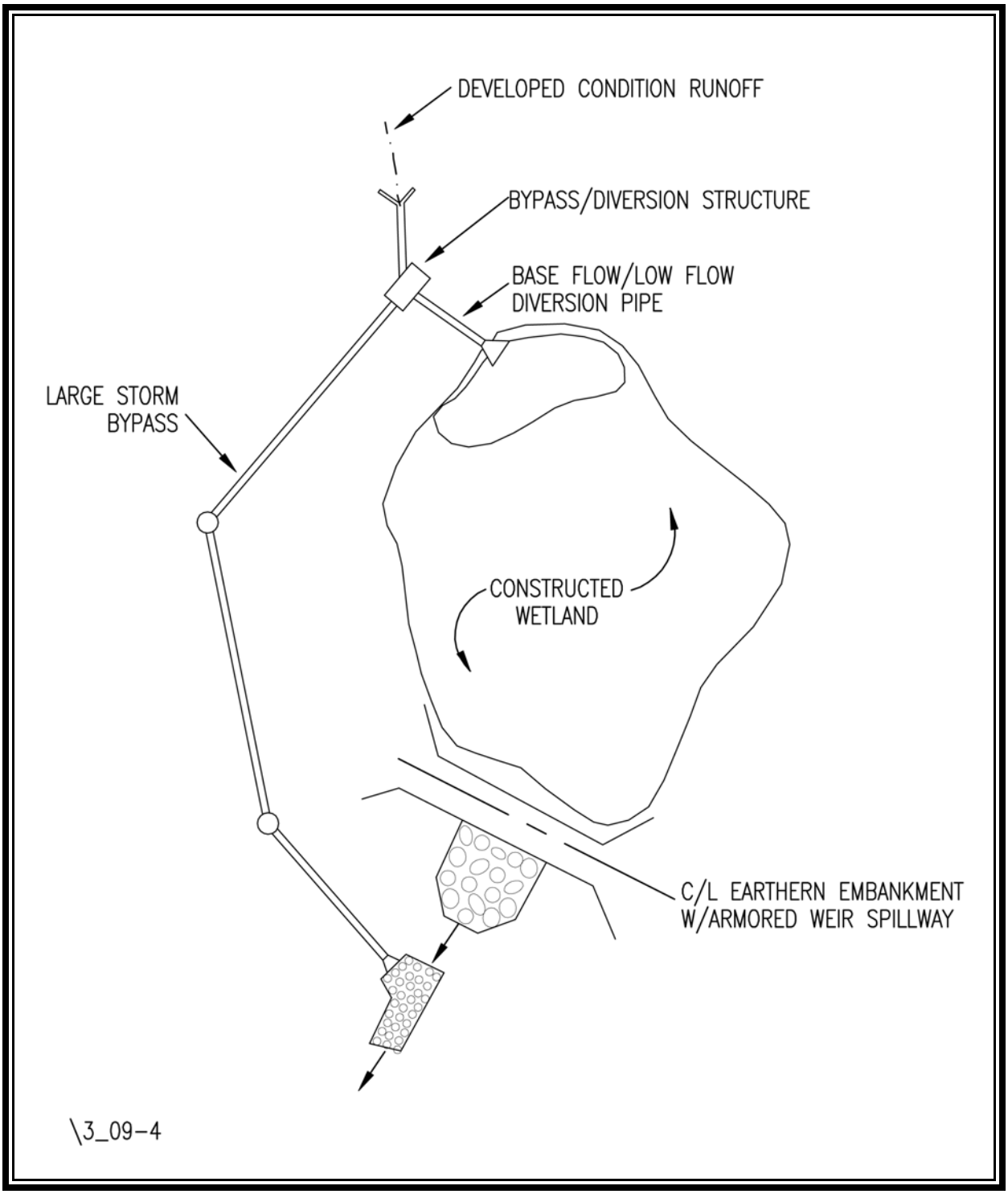

REFERENCES

Chesapeake Bay Local Assistance Department (CBLAD). Local Assistance Manual: A Guide for the Development of Local Programs in Order to Comply with the Chesapeake Bay Preservation Act. Richmond, Virginia: November 1989.

Galli, J. Analysis of Urban BMP Performance and Longevity in Prince George's County, Maryland. Washington, D.C.: Metropolitan Washington Council of Governments (MWCOG), August, 1992.

Maryland Department of Natural Resources (Md. DNR), Water Resources Administration. Guidelines for Constructing Wetland Stormwater Basins. Annapolis, Maryland: March, 1987.

Maryland Department of Natural Resources (Md. DNR), Water Resources Administration. Wetland Basins for Stormwater Treatment; Discussion and Background. Annapolis, Maryland: undated.

Northern Virginia Planning District Commission (NVPDC). Northern Virginia BMP Handbook. Annandale, Virginia: November, 1992.

Schueler, T.R. Design of Stormwater Wetland Systems: Guidelines for Creating Diverse and Effective Stormwater Wetland Systems in the Mid-Atlantic Region. Washington, D.C.: Metropolitan Washington Council of Governments (MWCOG), October, 1992.

Schueler, T.R., P.A. Kumble, and M.A. Heraty. A Current Assessment of Urban Best Management Practices. Washington, D.C.: Metropolitan Washington Council of Governments (MWCOG), March 1992.

Schueler, T. R. Controlling Urban Runoff: A Practical Manual for Planning and Designing Urban BMPs. Washington, D.C.: Metropolitan Washington Council of Governments (MWCOG), July, 1987.

Virginia Department of Conservation and Recreation (DCR). Virginia Erosion and Sediment Control Handbook (VESCH). 3rd ed. Richmond, Virginia: 1992.

Washington State Department of Ecology. Stormwater Management Manual for the Puget Sound Basin (The Technical Manual). Olympia, Washington: February, 1992.

Chapter 3.09

Constructed Stormwater Wetland – recently completed.

Constructed Stormwater Wetland – becoming stabilized, emergent vegetation barely visible.

Constructed Stormwater Wetland

Constructed Stormwater Wetland. Note vegetation protected from waterfowl by netting system.

Forebay and Constructed Stormwater Wetland incorporated into regional retention basin design.

Constructed Stormwater Wetland

MINIMUM STANDARD 3.10

GENERAL INFILTRATION PRACTICES

3.10A	Infiltration Basin
3.10B	Infiltration Trench
3.10C	Roof Downspout System
3.10D	Porous Pavement

View BMP Images

LIST OF ILLUSTRATIONS

#	FIGURE	PAGE
3.10-1a	Infiltration Basin - Plan and Section	3.10-2
3.10-1b	Infiltration Trench - Section	3.10-3
3.10-2	USDA Textural Triangle	3.10-5
3.10-3	Concentrated Input Pretreatment	3.10-11
3.10-4	Observation Well	3.10-12
3.10-5	Filter Fabric Placement	3.10B-6
3.10-6	Roof Downspout System with a Pretreatment Sump Basin	3.10C-4
3.10-7	Porous (open-graded) Pavement Section	3.10D-2

#	TABLE	PAGE
3.10-1	Pollutant Removal Efficiency for Infiltration Facilities	3.10-1
3.10-2	Hydrologic Soil Properties Classified by Soil Texture	3.10-6
3.10-3	Porous Asphalt Concrete Formulation	3.10D-8

MINIMUM STANDARD 3.10

GENERAL INFILTRATION PRACTICES

Definition

Infiltration facilities temporarily impound stormwater runoff and discharge it via infiltration into the surrounding soil.

Purpose

Infiltration facilities are primarily used for water quality enhancement. Their use to control large volumes of runoff for flooding and channel erosion control is often impractical. Therefore, the infiltration facilities presented in this handbook should generally be used to control the water quality volume and up to the 2-year design storm only. Infiltration practices that capture all of the runoff from the "first flush" (i.e., the water quality volume) may utilize dry storage above the water quality volume to provide sufficient reductions in the 1- or 2-year peak discharge as required. The 10-year and 100-year flows will usually exceed the capacity of an infiltration facility. **Table 3.10-1** contains the target pollutant removal efficiencies based on the runoff volume to be controlled.

Infiltration practices are appealing in that they help to reverse the hydrologic consequences of urban development by reducing peak discharge and providing groundwater recharge.

TABLE 3.10 - 1
Pollutant Removal Efficiency for Infiltration Facilities

BMP Description	Target Phosphorus Removal Efficiency
Infiltration facility with storage volume equivalent to 0.5 inches of runoff from the impervious Area.	50%
Infiltration facility with storage volume equivalent to 1.0 inch of runoff from the impervious area.	65%

FIGURE 3.10 - 1a
Infiltration Basin - Plan and Section

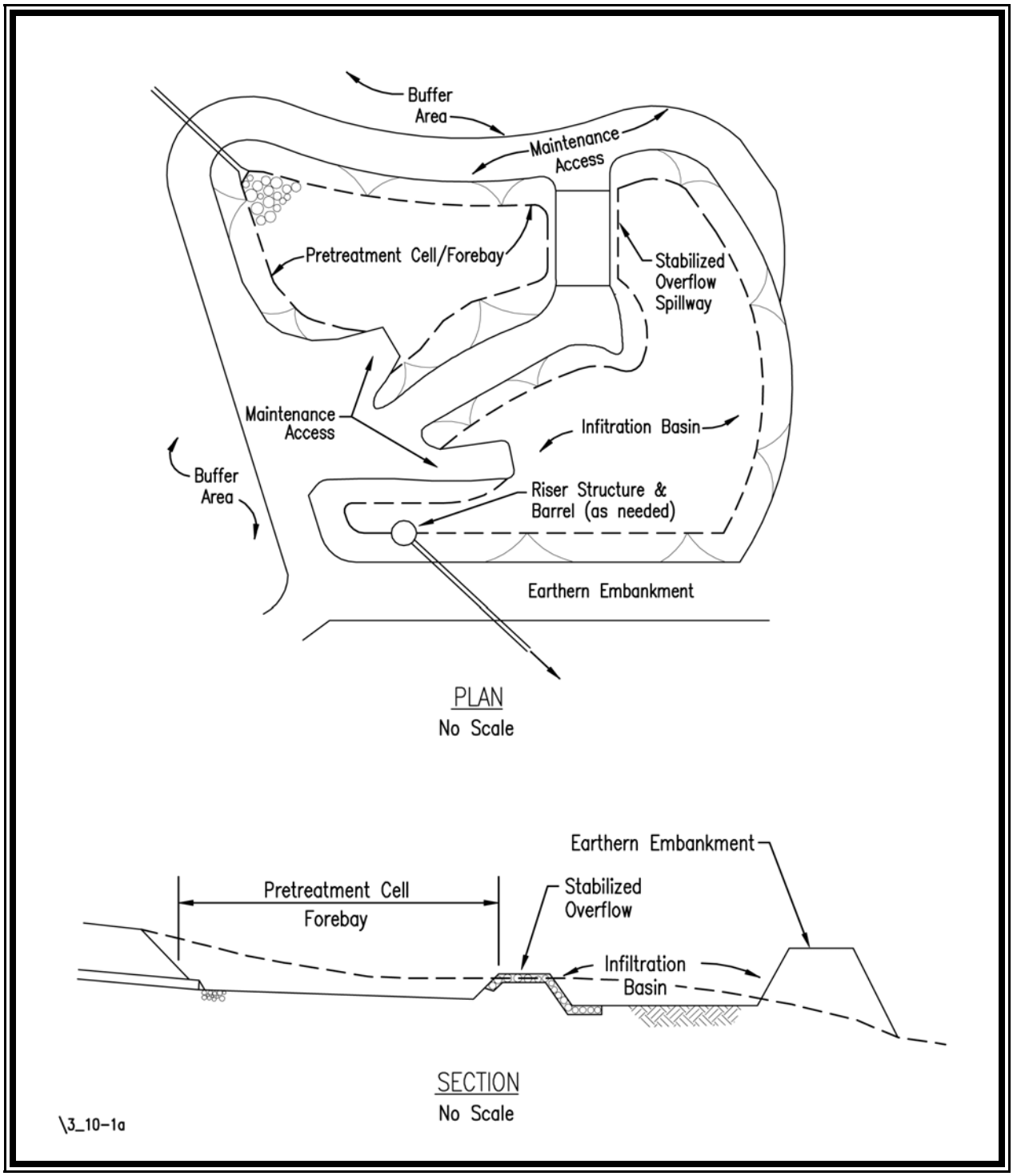

FIGURE 3.10 - 1b
Infiltration Trench - Section

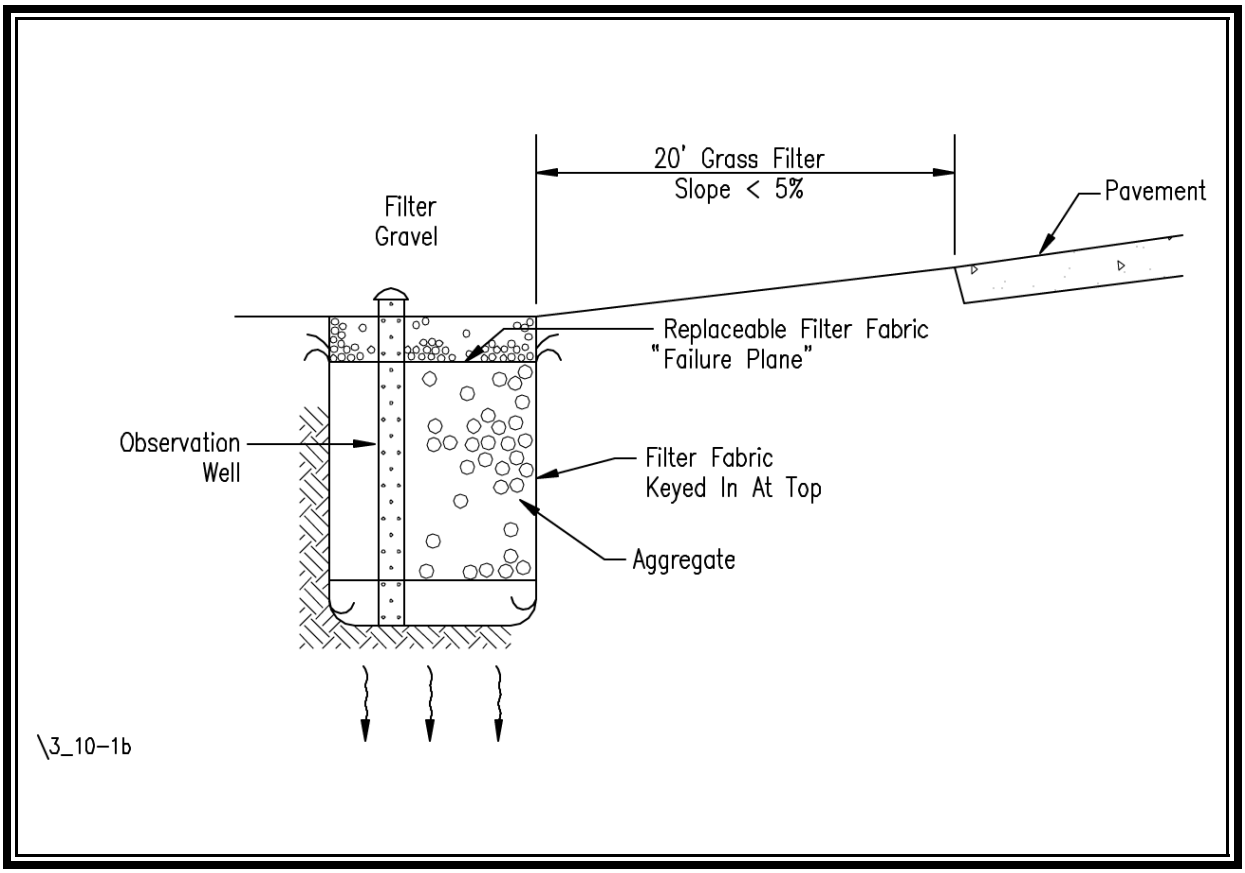

Conditions Where Practice Applies

Infiltration facilities are suitable for use where the subsoil is sufficiently permeable to provide a reasonable rate of infiltration. They are also practical where the water table is sufficiently lower than the design depth of the facility to prevent pollution of the groundwater. Infiltration is not recomended for areas underlain by karst topography. Concentrating runoff into an infiltration facility may cause solution channels to develop or cause karst collapse.

Infiltration practices are generally suited for low- to medium-density development (38% to 66% impervious cover). Specific conditions such as drainage area size and development conditions for each infiltration practice are discussed in the appropriate section of this Standard.

Infiltration facilities are subject to clogging and, therefore, are not recommended for areas where sediment, grease, or oil loadings may be high. Such areas include roadways, parking lots, car service facilities, etc. To increase the life expectancy of an infiltration facility, a pretreatment facility such as a settling basin or "cell", or additional BMP in series should be used to remove sediments or other substances from the stormwater runoff **before** it enters the infiltration facility. Refer to **Minimum Standard 3.15, Manufactured BMP Systems** for additional pretreatment BMPs.

Planning Considerations

The following planning considerations are provided for infiltration practices overall. More specific considerations that may be applicable are presented with each infiltration practice.

Site Conditions

In the past, many designs were accepted based on soils information compiled from available data, such as SCS soil surveys. While these sources may be appropriate for a pre-engineering feasibility study, final design and acceptance should be based on an actual subsurface analysis and permeability tests.

The high failure rates of infiltration facilities, as presented in recent studies (MWCOG), suggest that site-specific soil borings should be required to support the use of infiltration practices. The suitability of the soil for use with the desired infiltration practice can be determined from the soil boring analysis. Details for appropriate geotechnical techniques can be found in the references listed at the end of this section (MD WRA). In general, the following information should be included in a site-specific subsurface or geotechnical study:

1. **Soil permeability**

   The soil types within the subsoil profile, extending a minimum of 3 feet below the bottom of the facility, should be identified to verify the ***infiltration rate*** or ***permeability*** of the soil. The infiltration rate, or permeability, measured in inches per hour, is the rate at which water passes through the soil profile during saturated conditions. Minimum and maximum infiltration rates establish the suitability of various soil textural classes for infiltration. Each soil texture and corresponding hydrologic properties within the soil profile are identified through analysis of a gradation test of the soil boring material. **Soil textures acceptable for use with infiltration systems include those with infiltration rates between 0.52 inches per hour and 8.27inches per hour, and include loam, sandy loam, and loamy sand**.

Soil textures with infiltration rates ***less than 0.52 inches per hour*** *or greater than* ***8.27 inches per hour*** *are* ***not*** ***suitable*** *for infiltration practices.*

FIGURE 3.10 - 2
USDA Textural Triangle

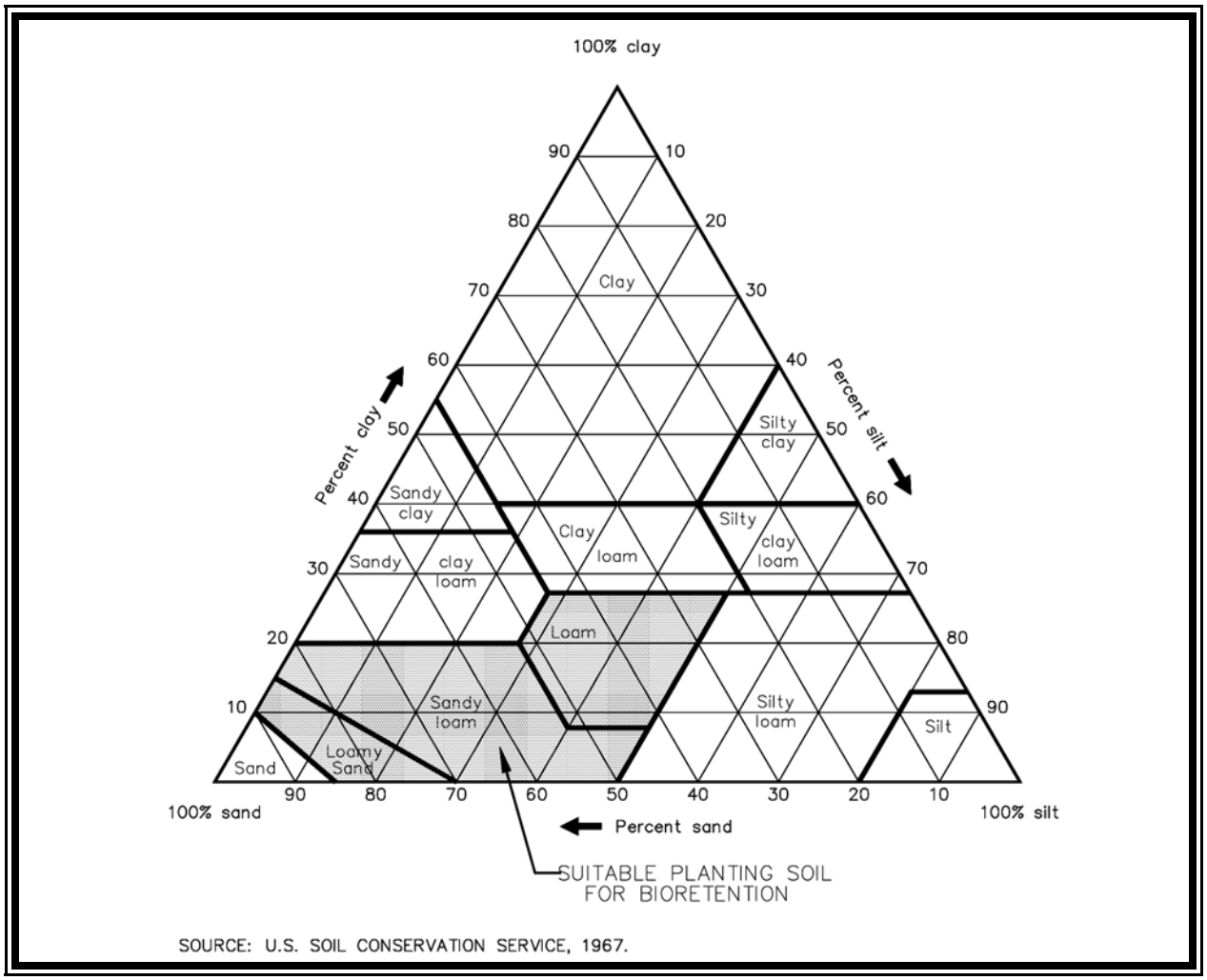

Soils that have a 30% clay content are unacceptable for use with infiltration facilities since they are structurally unstable and susceptible to frost heaving. Similarly, soils that have poor percolation capabilities or excessively drained soils, such as sand, should not be used for infiltration purposes. The soil textures presented in **Table 3.10-2** correspond to the soil textures of the U.S. Department of Agriculture (USDA) Textural Triangle presented in **Figure 3.10-2**. It should be noted that the

difference in soil textures of sand and loamy sand are the percentages of clay found in the soil. While the actual percent of difference is small, a significant difference in infiltration rates can be expected. Note that actual permeability tests may indicate infiltration rates different from those in **Table 3.10-2**.

Predicting the exfiltration of water from an infiltration facility is difficult, especially over an extended period, such as the desired life expectancy of the facility. A factor of safety should be applied in the design to ensure that the facility is sized to function even when partially clogged. (This is discussed further in the **General Design Criteria** presented later in this section.)

TABLE 3.10 - 2
Hydrologic Soil Properties Classified by Soil Texture

Texture Class	Effective Water Capacity (C_w) (inch per inch)	Minimum Infiltration Rate (*f*) (inch per hour)	Hydrologic Soil Grouping
Sand	0.35	8.27	A
Loamy Sand	0.31	2.41	A
Sandy Loam	0.25	1.02	B
Loam	0.19	0.52	B
Silt Loam	0.17	0.27	C
Sandy Clay Loam	0.14	0.17	C
Clay Loam	0.14	0.09	D
Silty Clay Loam	0.11	0.06	D
Sandy Clay	0.09	0.05	D
Silty Clay	0.09	0.04	D
Clay	0.08	0.02	D

2. **Depth to the seasonal high groundwater table and bedrock**.

Typically, infiltration facilities are not recommended in areas with a high groundwater table due to the inability of the soil to adequately filter out pollutants before the stormwater enters the water table. A distance of **2** to **4** feet is required between the bottom of an infiltration

facility and the existing water table or bedrock. Similarly, infiltration facilities are not recommended for areas where karst topography is present (in Virginia, west of the Blue Ridge Mountains) due to the possibility of causing subsurface collapse and sink hole formation.

Determination of the seasonal high groundwater table elevation should be given a high priority because flooding of an infiltration facility will render it inoperable during periods of high precipitation. Occasionally, based on the hydraulic conductivity of the soil and the physical dimensions of the trench, a greater separation than 2 to 4 feet may be necessary. Since some soils do not always contain the low chroma (gray) mottles indicative of seasonal saturation, an observation well may be used to locate the seasonal high groundwater table to verify the soil analysis.

Subsurface analysis techniques and related engineering recommendations are too broad and complex for the scope of this handbook. The references listed at the end of this section are recommended for further reading if more detailed information regarding the feasibility analysis of subsurface conditions is needed.

Selecting the optimum depth of an infiltration facility is a process of analyzing constraints. It includes seeking those soil horizons which have a permeability rate that will allow the structure to empty within 48 hours after a design storm event. The design elements of this process are covered in **General Design Criteria**, presented later in this section.

3. **Topographic conditions**

The topographic conditions of a development site represent feasibility factors that should be examined before designing an infiltration system. These factors include the slope of the land, the nature of the soil (natural or fill), and the proximity of building foundations and water supply wells.

The use of a particular BMP is restricted by the allowable slope for that practice. Porous asphalt pavement, for example, requires a relatively level or gently sloping area less than or equal to 3% (20H:1V). All other infiltration practices should be located in areas in which the slope does not exceed 20% (5H:1V). Using infiltration practices on a steep grade increases the chance of water seepage from the subgrade to the lower areas of the site and reduces the amount which infiltrates.

Developments occurring on sloping and rolling sites often require extensive cut and fill operations. The use of stormwater management infiltration systems on fill material is not recommended due to the possibility of creating an unstable subgrade. Fill areas can be very susceptible to slope failure due to slippage along the interface of the in-situ and fill material. This condition could be aggravated if the fill material is allowed to become saturated by using infiltration practices.

Nearby building foundations should be at least 10 feet up-gradient of the infiltration system to prevent the possibility of flooding basements. Proximity to septic systems is also a concern and local health officials should be consulted for guidance on minimum setbacks. Additionally, the location of infiltration practices should be a minimum of 100 feet from any water supply well where the runoff is from commercial or industrial impervious parking areas.

Sediment Control

It has been reported that many infiltration BMPs have failed because adequate precautions to prevent sediment contamination were not implemented (NVPDC, MWCOG). Provisions for long-term sediment control, or pretreatment of the stormwater runoff, must be incorporated into the design, along with precautions taken during onsite construction activities. Advance consideration should be given to the potential impacts that construction techniques, work sequence, and equipment could have on the future maintenance requirements of the BMP. Serious maintenance problems can be averted, or reduced, by the adoption of relatively simple measures during construction.

1. **Construction Runoff**

Infiltration BMPs should be constructed AFTER the site work is completed and stabilization measures have been implemented.

Infiltration facilities built prior to the completion of site construction activities often become choked with sediment, rendering them inoperable from the outset. Simply providing inlet protection or some other filtering mechanism during site construction may not adequately control the sediment. One large storm can overload protection devices and completely clog the infiltration facility.

To protect an infiltration facility **during** construction, provisions for sediment control should be included in the design. The following references provide technical guidance on sediment control designs:

- Virginia Erosion and Sediment Control Handbook (VESCH), DCR, 1992,
- Standards and Specifications for Infiltration Practices, Md. DNR, 1984, and
- Controlling Urban Runoff (MWCOG, 1987).

Experience with infiltration practices in other states has shown that stormwater management infiltration facilities must be protected until their contributing drainage areas have been adequately stabilized *(Maryland,1987).*

The definition of the term "adequately stabilized" when describing the contributing drainage area of an infiltration BMP is critical to the success of the facility. An approved erosion and sediment control plan will specify various devices for trapping sediment during construction, such as silt fences, diversions, sediment traps, etc. It will also specify measures and provide specifications for site stabilization. Following construction activities, the temporary sediment control measures should be removed at the direction of the erosion control inspector when, at a minimum, stabilization measures, such as seed and mulch, are in place. This does not mean, however, that stabilization has occurred. Often, it may take one or more full growing seasons before the pervious areas are fully stabilized, and the construction-related sediment load is controlled. **Therefore, provisions to bypass the stormwater around, or away from, the infiltration facility during the stabilization period should be implemented.**

2. **Urban Runoff**

A fully stabilized site will generate a particulate pollutant load resulting from natural erosion, lawn and garden debris such as leaves, grass clippings, mulch, roadway sand, etc. Various measures can be incorporated into the design to protect the facility and facilitate regular maintenance. The following discussion on pretreatment systems for infiltration facilities is adapted from the Northern Virginia BMP Handbook (NVPDC 1992) and Standards and Specifications for Infiltration Practices (Md. DNR, 1984).

Urban and ultra-urban development projects are usually limited to the use of infiltration trenches, which include ***dry wells***, ***porous pavement***, and ***roof downspout systems***. Runoff to any infiltration trench must be filtered to remove sediment prior to entering the structure.

Runoff to an infiltration trench is usually ***concentrated input***, which is conveyed by gutters, inlets, or pipes, and enters the facility at one or more points. Sediment control devices for *concentrated input* include in-line structures such as water quality inlets (Refer to **Minimum Standard 3.15, Manufactured BMP Systems**), sediment collection sumps or similar structures, provided there is an assured means of regular inspection and maintenance. Any pretreatment BMP which allows sediment- laden water to enter the infiltration facility upon failure of the pretreatment BMP should be avoided. Ideally, a clogged or failed pretreatment BMP should create a noticeable amount of overland flow bypassing the infiltration facility, which indicates that it is time to maintain the pretreatment decvice. Prompt maintenance of the pretreatment BMP will ensure that the infiltration facility remains intact.

The design of sediment control systems for concentrated input facilities invites innovation. Redundant controls or backup systems should be employed wherever there is an opportunity. One type of backup sediment control measure used for trenches with large diameter CMP pipe storage consists of lining the interior surface of the pipe with a geotextile fabric as shown in **Figure 3.10-3**. This continuous liner is held against the interior metal surface of the pipe by expandable rings. If routine monitoring reveals that the water is not being released from the pipe, the filter should be inspected and replaced as necessary. Note that the diameter of the pipe must be such that access for

maintenance is possible.

Any sediment collection structure must be adequate to handle the expected flows. Therefore, filter systems should be designed with an additional capacity to account for eventual, partial clogging.

Runoff to an infiltration BMP may also be in the form of ***sheet flow***, entering the top of the storage reservoir over a wide area. **Figure 3.10-1b** portrays one such infiltration trench where overland sheet flow is directed across a gently sloping grassed filter strip to the surface of the infiltration trench. The grassed filter strip is the primary pretreatment control and must be at least **20 feet wide** and have a **5% slope or less** to be effective. The entry berm must be parallel to the contour to maintain uniform flow to the trench.

The choice of vegetative cover should be made with respect to its tolerance to water, growth rate, climatic preference, stabilization capacity, and maintenance considerations. Refer to the VESCH DCR, 1992, and any local ordinances for specific vegetative recommendations. It is essential that a complete cover of dense turf be established **BEFORE** stormwater flows are allowed to enter the facility.

The trench itself is protected from sediment entry by a layer of geotextile filter fabric (called a *sediment barrier*). The sediment barrier is separate from the filter fabric which lines the trench sides so it can be replaced as part of routine maintenance. It is installed over the top of the crushed stone storage chamber and covered with one-half to one foot of 3/4-inch crushed stone. The edges of the filter fabric must be placed so that runoff cannot bypass the sediment barrier. All input water must flow over the grassed filter strip and enter the trench through the sediment barrier at the top.

Unlike the other trench types, porous pavement may be difficult to maintain because the pollutant load is carried by other means, such as vehicle traffic, rather than runoff. Porous pavement, therefore, requires a strict maintenance program to ensure that the design flow can pass through the pavement. Specific maintenance requirements, along with construction methods and specifications for porous pavement and various other infiltration BMPs, are provided later in this chapter.

FIGURE 3.10 - 3
Concentrated Input Pretreatment

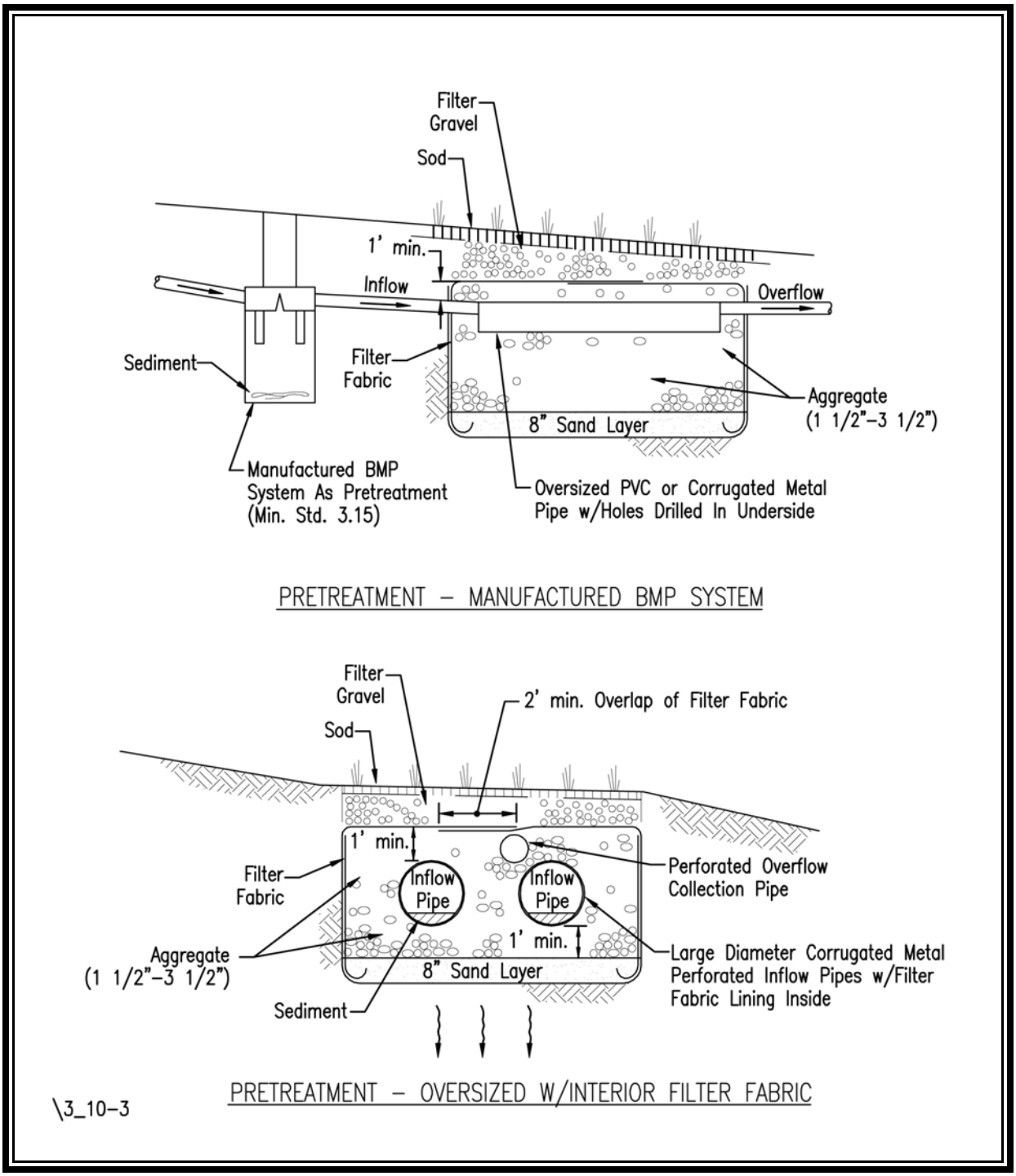

FIGURE 3.10 - 4
Observation Well

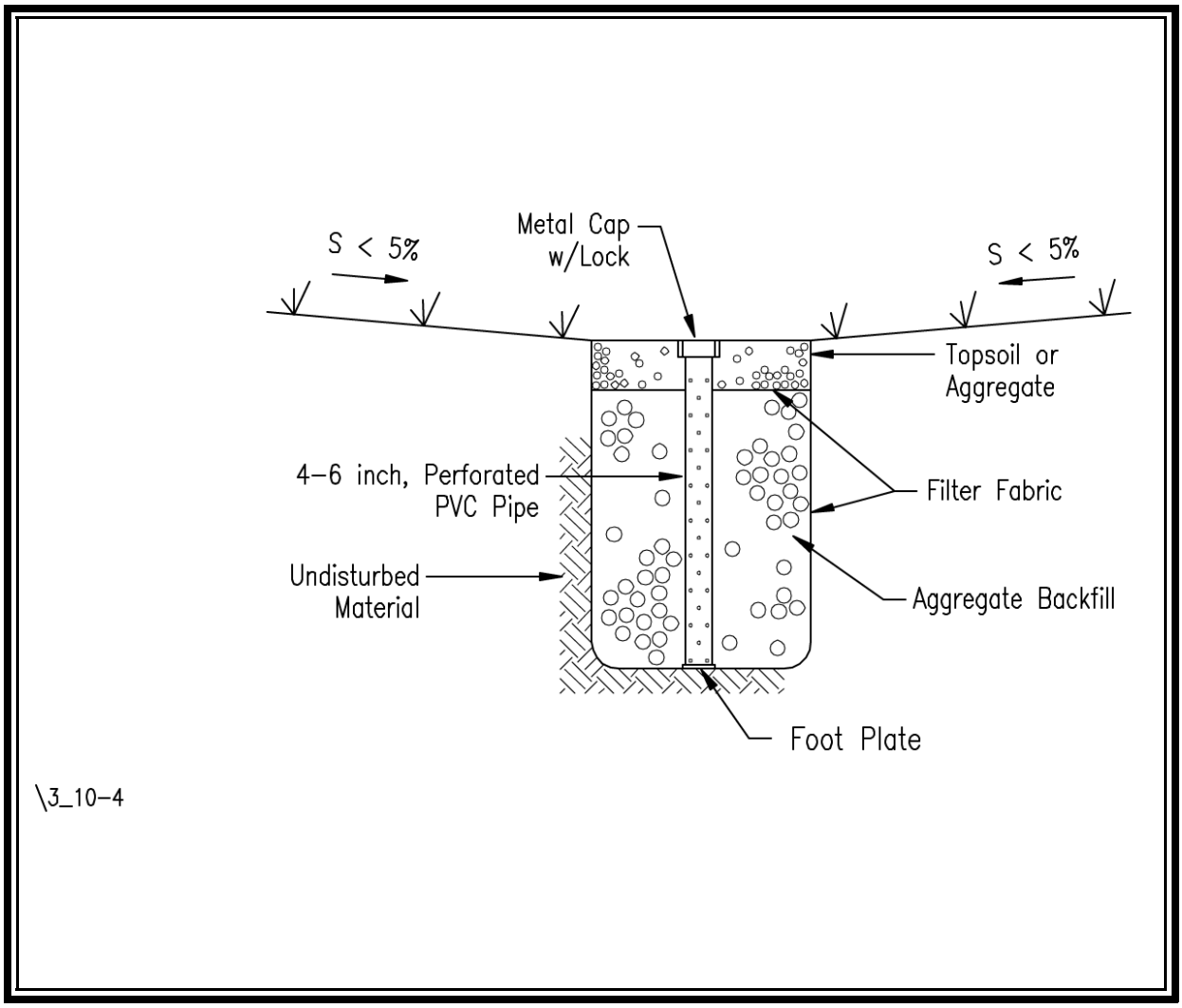

Maintenance

The maintenance requirements for a selected infiltration practice must be considered during the planning and design of the facility. Surface facilities such as basins and swales can be visually inspected and easily maintained. The surface of an infiltration trench or dry well can also be visually inspected and maintained if they are constructed at grade. Since their subsurface storage areas cannot be inspected above ground, **observation wells must be required** (refer to **Figure 3.10-4**). Maintenance of the subsurface storage area, however, short of excavating the facility, is very difficult. Therefore, many landowners, developers and local program administrators have been discouraged from using infiltration facilities.

Recent studies indicated that slightly more than half of the surveyed infiltration facilities had failed within the first five years of operation (MWCOG, 1992; Md. DOE, 1987). Often, failure was due to poor subsurface investigations and/or sediment control. Since repair or rehabilitation of underground facilities (infiltration trenches) is limited, design criteria, subsurface exploration, and maintenance requirements should be strictly enforced. In addition, pretreatment of the stormwater runoff will likely extend the life of an infiltration facility by trapping sediments and debris before they enter, and by allowing for the removal of the accumulated material without excavating the structure. To reduce the potential for costly maintenance and/or system reconstruction, it is strongly recommended that the stone reservoir portion of infiltration trenches be located in a lawn area and as close to the ground surface as possible.

Infiltration trenches should not be located beneath paved surfaces, such as parking lots.

General Design

The purpose of this section is to provide recommendations and minimum criteria for the design of infiltration practices intended to comply with the runoff quality requirements of the Virginia Stormwater Management program.

The types of infiltration facilities which are recognized for stormwater management purposes are ***infiltration basins*** and ***infiltration trenches***. The design, construction, and maintenance criteria for infiltration trenches is also applied to the design of the storage volume for ***porous pavement*** and ***roof downspout systems*** (or *dry wells*).

The criteria presented below apply to the design of infiltration basins and trenches for ***water quality enhancement***. This means that the runoff volume to be treated is determined by the water quality volume and the desired pollutant removal efficiency.

Hydrology and Hydraulics

The procedures outlined in **Chapter 4, Hydrologic Methods**, should be used to determine the post-developed hydrology of the drainage area being served by the infiltration BMP. Provisions for large storm bypass must be provided, even when a stormwater BMP is being utilized for water quality enhancement only and not peak discharge control. Ideally, large storms should be diverted around infiltration facilities, or through the facility with a minimum of disruption and/or turbulence

Sizing Procedure

The storage volume required for infiltration facilities designed for water quality enhancement is determined by the water quality volume - ½ to 1 inch of runoff, determined by the desired pollutant removal efficiency (refer to **Table 3.10-1**).

A Darcy's Law approach is recommended for sizing water quality infiltration BMPs. This will assume that the drain time of the facility is controlled by one-dimensional flow through the bottom surface.

$$Q = f\,I\,SA$$

Equation 3.10-1
Darcy's Law

where:
Q = rate of exfiltration into soil, cfs
f = infiltration rate of the soil in ft/hr
I = hydraulic gradient
SA = bottom surface area of facility in ft^2

1. **Infiltration Rate** –

Over the life of an infiltration facility, the rate of infiltration into the soil, f, may gradually decrease due to clogging of the surface layer of soil. The documented high failure rate of infiltration facilities (MWCOG) suggests that a safety factor be built into the design of the facility to allow for future clogging. Therefore, ***a safety factor of 2*** should be applied to the infiltration rate determined from the soil analysis. The design soil infiltration rate, f_d, therefore, is equal to one-half of the actual rate:

$$f_d = 0.5f$$

2. **Hydraulic Gradient –**

In areas with a shallow water table or impermeable layer, the hydraulic gradient may have an impact on the allowable design depth. The hydraulic gradient is given by the equation:

$$I = \frac{h \% L}{L}$$

Equation 3.10-2
Hydraulic Gradient

where: I = hydraulic gradient

h = height of the water column over the infiltrating surface, ft.
L = distance from the top surface of the BMP to the water table, bedrock, impermeable layer, or other soil layer of a different infiltration rate, ft.

The hydraulic gradient will be asummed to be equal to one in all infiltration designs since the gradient approaches unity as the facility drains. Therefore,

$$I=1$$

3. **Maximum Ponding or Storage Time, T_{max} –**

A water quality infiltration facility should be designed with a maximum drain time, T_{max}, of 48 hours for the total volume.

The maximum drain time, along with the minimum design soil infiltration rate, f_d, as verified through a subsurface investigation and analysis, will dictate the maximum allowable design depth, d_{max}, of the structure. The maximum depth for an infiltration basin and trench is covered in the following minimum standards.

MINIMUM STANDARD 3.10A

INFILTRATION BASIN

Definition

An infiltration basin is a vegetated, open impoundment where incoming stormwater runoff is stored until it gradually infiltrates into the soil strata.

Purpose

Infiltration basins are used primarily for water quality enhancement. However, flooding and channel erosion control may also be achieved within an infiltration basin by utilizing a multi-stage riser and barrel spillway to provide controlled release of the required design storms above the water quality (infiltration) volume (refer to **Figure 3.10-1**).

Conditions Where Practice Applies

Infiltration basins may be used where the subsoil is sufficiently permeable to provide a reasonable infiltration rate and where the water table is low enough to prevent pollution of groundwater.

Drainage Area

Drainage areas served by infiltration basins should be limited to less than 50 acres. Drainage areas which are greater than 50 acres typically generate such large volumes of runoff that other detention or retention BMPs are more practical and cost-effective.

Development Conditions

Infiltration basins are generally suitable BMPs in low- to medium-density residential and commercial developments (38% to 66% impervious cover).

Planning Considerations

Appropriate soil conditions and protection of the groundwater are among the important considerations when planning an infiltration basin. Refer to the **Planning Considerations** for **General Infiltration Practices** previously discussed in this standard.

An infiltration basin has relatively large surface area requirements, when compared with an infiltration trench or dry well, and ranges from 3 to 12 feet in depth. The seasonal high groundwater table or bedrock should be located at least 2 to 4 feet below the bottom of the basin. Infiltration facilities are not recommended for areas where karst topography is present (in Virginia, west of the Blue Ridge Mountains) due to the possibility of causing subsurface collapse and sink hole formation.

Maintenance

Like all stormwater BMPs, access to an infiltration basin should be considered in the planning stage. Access (as well as maneuvering room) should be provided to at least one side of the facility and the control structure or spillway. In addition, identifying a location and designing for on-site sediment disposal will greatly reduce long-term maintenance costs.

Design Criteria

The purpose of this section is to provide recommendations and minimum criteria for the design of infiltration basins intended to comply with the runoff quality requirements of the Virginia Stormwater Management program.

General

The design of infiltration basins should be according to the following Minimum Standards where applicable: **3.01, Earthen Embankment**; **3.02, Principal Spillway**; **3.03, Vegetated Emergency Spillway**; **3.04, Sediment Forebay**; **3.05, Landscaping**, and **3.10, General Infiltration Practices**, along with additional criteria set forth below. The designer is not only responsible for selecting the appropriate components for his or her particular design but also for ensuring their long-term operation by specifying appropriate structural materials.

The design of the overflow vegetated spillway must consider the frequency of flow. The spillway may require an armored bottom if it is to function during every storm which exceeds the water quality volume (refer to **Minimum Standard 3.03**).

Hydrology and Hydraulics

Chapter 4, **Hydrologic Methods** should be used to develop the pre- and post-developed hydrology for a basin's contributing watershed. An infiltration basin designed for water quality enhancement still must provide an overflow or spillway for the bypass of large storms. **Chapter 5**, **Engineering Calculations** provides the procedures for the design of the riser and barrel system and the emergency spillway design procedures.

Soils Investigation

A minimum of one soil boring log should be required for each 5,000 square feet of infiltration basin area (plan view area) and under no circumstances should there be less than three soil boring logs per basin (Washington State DOE, 1992). Refer also to the **Planning Considerations** and **Design Criteria** of **General Infiltration Practices**, discussed at the beginning of this standard.

Topographic Conditions

Infiltration basins should be a minimum of 50 feet from any slope greater than 15%. If unavoidable, a geotechnical report should address the potential impact of infiltration on or near the steep slope. Developments on sloping sites often require extensive cut and fill operations. **The use of infiltration basins on fill sites is not permitted**. Also, infiltration basins should be a minimum of 100 feet up-slope and 20 feet down-slope from any buildings.

Design Infiltration Rate

The design infiltration rate, f_d, should be set to equal one-half the infiltration rate, f, determined from the soil analysis. Therefore:

$$f_d = 0.5\, f$$

Maximum Ponding Time and Depth

All infiltration basins should be designed to completely drain stored runoff within 2 days following the occurrence of a storm event. Thus, an allowable maximum ponding time, T_{max} , of 48 hours should be used.The maximum ponding depth for an infiltration **basin** is:

$$d_{max} = f_d T_{max}$$

Equation 3.10-3
Maximum Ponding Depth for Infiltration Basin

where: d_{max} = maximum depth of the facility, in ft.
f_d = design infiltration rate of the basin area soils, in ft/hr (f_d = ½ f)
T_{max} = maximum allowable drain time = 48 hrs.

The ponding depth should not be so great as to contribute to the compaction of the soil surface. Depending on the specific soil characteristics, a maximum ponding depth of 2 feet is generally recommended (MWCOG, 1992).

The minimum surface area of the facility bottom is:

$$SA_{min} = \frac{Vol_{wq}}{f_d T_{max}}$$

Equation 3.10-4
Minimum Bottom Surface Area for infiltration Basin

where: SA_{min} = minimum basin bottom surface area, in ft^2;
Vol_{wq} = water quality volume requirements, in ft^3;
f_d = design infiltration rate of the basin area soils, in ft/hr;
T_{max} = maximum allowable drain time, in hours

Runoff Pretreatment

Infiltration basins should always be preceded by a pretreatment facility. Grease, oil, floatable organic materials, and settleable solids should be removed from the runoff before it enters the infiltration basin. Vegetated filters, sediment traps and/or forebays, water quality inlets (refer to **Minimum Standard 3.15, Manufactured BMP Systems**) are just a few of the available pretreatment strategies. Refer to the discussion on **Sediment Control** in the **General Infiltration Practices** portion of this section.

At a minimum, the layout and design of the basin should include a sediment forebay or pretreatment cell, as shown in **Figure 3.10-1**, to enhance and prolong the infiltration capacity. Any pretreatment facility should be included in the design of the basin and should include maintenance and inspection requirements. It is recommended that a grass strip or other vegetated buffer at least 20 feet wide be maintained around the basin to filter surface runoff.

Principal and Emergency Spillways

A diversion structure upstream of an ***off-line*** basin will regulate the rate of flow into the basin, but not the volume. Therefore, infiltration basins should have a spillway to convey flows from storm events which are larger than the design capacity. The primary outlet should be located above the required infiltration volume. Additionally, a riser and barrel system is advantageous for future conversion to an extended-detention or retention facility if the infiltration capacity of the soil becomes impaired. All design elements of a principal spillway should be per **Minimum Standard 3.02, Principal Spillways**.

An emergency spillway is recommended for all impounding structures, including infiltration basins. If a vegetated spillway is to be used as the primary outlet above the water quality volume, care should be taken to design for the increased frequency of use. This is especially critical between maintenance operations when the infiltration capacity is decreased due to sediment loads. If a spillway is to be used for all storms which generate more runoff than the water quality volume, then a nonerodible surface should be provided. All design elements of a *vegetated* emergency spillway should be per **Minimum Standard 3.03, Vegetated Emergency Spillways**.

Stabilization

As with all stormwater structures, all disturbed areas associated with the construction of the facility, including spoil and borrow areas, should be stabilized immediately according to the VESCH 1992 edition. The basin floor area, emergency spillway, and any vegetative buffer around the facility are critical areas and should be addressed with a specific stabilization measure.

The choice of vegetative cover should be made with respect to its tolerance to water, growth rate, climatic preference, stabilization capacity, and maintenance requirtements. Refer to the VESCH 1992 edition and any local ordinances for specific vegetative recommendations. It is essential that a complete cover of dense turf be established **BEFORE** stormwater flows are allowed to enter the facility.

Fencing

Fencing may be provided where deemed necessary by the developer, land owner, or locality for the purposes of public safety or protection of vegetation.

Construction Specifications

In general, widely accepted construction standards and specifications, such as those developed by the USDA Soil Conservation Service or the U.S. Army Corps of Engineers, should be followed where applicable. Further guidance can be found in the Soil Conservation Service's Engineering Field Manual. Specifications for the work should conform to the methods and procedures indicated for installing earthwork, concrete, reinforcing steel, pipe, water gates, metal work, woodwork and masonry as they apply to the site and the purpose of the structure. The specifications should also satisfy all requirements of the local government.

The construction of infiltration basins should also be in accordance with the following Minimum Standards and Specifications where applicable: **3.01, Earthen Embankment**; **3.02, Principal Spillway**; **3.03, Vegetated Emergency Spillway**; **3.04, Sediment Forebays**; **3.05, Landscaping**; along with the criteria set forth below. These specifications have been adapted from Standards & Specifications for Infiltration Practices (Md. DNR, 1984 and Washington State DOE, 1992).

Sequence of Construction

The sequence of various phases of basin construction should be coordinated with the overall project construction schedule. Rough excavation of the basin may be scheduled with the rough grading phase of the project to permit use of the material as fill in earthwork areas. Otherwise, **infiltration measures should not be constructed or placed into service until the entire contributing drainage area has been stabilized**. Runoff from untreated, recently constructed areas within the drainage area may load the newly formed basin with a large volume of fine sediment. This could seriously impair the natural infiltration ability of the basin floor.

The specifications for construction of a basin should state the following: 1) *the earliest point at which storm drainage may be directed to the basin*, and 2) *the means by which this delay in basin use is to be accomplished*. Due to the wide variety of conditions encountered among projects, each project should be evaluated separately to postpone basin use for as long as possible.

Excavation

Initially, the basin floor should be excavated to within one foot of its final elevation. Excavation to the finished grade should be delayed until all disturbed areas in the watershed have been stabilized or protected. The final phase of excavation should remove all accumulated sediment. Relatively light, tracked-equipment is recommended for this operation to avoid compaction of the basin floor. After the final grading is completed, the basin floor should be deeply tilled by means of rotary tillers or disc harrows to provide a well-aerated, highly porous surface texture.

Lining Material

Establishing dense vegetation on the basin side slopes and floor is recommended. A dense vegetative cover will not only prevent erosion and sloughing, but will also provide a natural means to maintain relatively high infiltration rates. Inflow points to the basin should also be protected with erosion controls (e.g., riprap, flow spreaders, energy dissipators, etc.), as well as a sediment forebay.

Selection of suitable vegetative materials and application of required fertilizer and mulch should be per the VESCH 1992 edition.

Maintenance / Inspection Guidelines

The following maintenance and inspection guidelines are not intended to be all-inclusive. Specific facilities may require other measures not discussed here.

Inspection Schedule

When infiltration basins are first made functional they should be inspected monthly and after any large storm event. Thereafter, once the basin is functioning satisfactorily and without potential sediment problems, inspections may be made semi-annually and after any large storm events. All inspections should include investigation for potential sources of contamination.

Sediment Control

The basin should be designed to allow for maintenance. Access should be provided for vehicles to easily maintain the forebay (pre-settling basin) without disturbing vegetation or sediment any more than what is absolutely necessary.

Grass bottoms in infiltration basins seldom need replacement since grass serves as a good filter material. If silty water is allowed to trickle through the turf, most of the suspended material is strained out within a few yards of surface travel. Well-established turf on a basin floor will grow up through sediment deposits forming a porous turf and preventing the formation of an impenetrable layer. Grass planted on basin side slopes should also prevent erosion.

Vegetation Maintenance

Maintenance of the vegetation on the basin floor and side slopes is necessary to promote a dense turf with extensive root growth, which subsequently enhances infiltration, prevents erosion and sedimentation, and deters invasive weed growth. Bare spots should be immediately stabilized and revegetated.

The use of low-growing, stoloniferous grasses will permit long intervals between mowings. Mowing twice a year is generally satisfactory. Fertilizers should be applied only as necessary and in limited amounts to avoid contributing to pollution problems, including groundwater pollution, for which the infiltration basin helps mitigate. Consult the VESCH, 1992 edition for appropriate fertilizer types and application rates.

Design Procedures

The following design procedure represents a generic list of the steps typically required for the design of an infiltration basin.

1. Determine if the anticipated development conditions and drainage area are appropriate for an infiltration basin application.

2. Determine if the soils (permeability, bedrock, water table, Karst, embankment foundation, etc.) and topographic conditions (slopes, building foundations, etc.) are appropriate for an infiltration basin application.

3. Locate the infiltration basin on the site within topographic constraints.

4. Determine the drainage area to the infiltration basin and calculate the required water quality volume.

5. Evaluate the hydrology of the contributing drainage area to determine peak rates of runoff.

6. Design the infiltration basin:
   - Design infiltration rate, $f_d = 0.5\,f$.
   - Max. Storage time T_{max} = 48 hours
   - Max. Storage depth, d_{max}
   - Runoff pretreatment - concentrated input, sheet flow input, sediment forebay
   - Vegetated buffer around basin to filter surface runoff
   - Vegetated emergency spillway and/or riser and barrel design
   - Earthen Embankment design

7. Provide material specifications.

8. Provide sequence of construction.

9. Provide maintenance and inspection requirements.

MINIMUM STANDARD 3.10B

INFILTRATION TRENCH

Definition

An infiltration trench is a shallow, excavated trench backfilled with a coarse stone aggregate to create an underground reservoir. Stormwater runoff diverted into the trench gradually infiltrates into the surrounding soils from the bottom and sides of the trench. The trench can be either an open surface trench or an underground facility.

Purpose

Infiltration trenches are used primarily as water quality BMPs. Trenches are generally 2 to 10 feet deep and are backfilled with a coarse stone aggregate, allowing for temporary storage of storm runoff in the voids between the aggregate material. Stored runoff gradually infiltrates into the surrounding soil. The surface of the trench can be covered with grating and/or consist of stone, gabion, sand, or a grassed area with a surface inlet. Utilizing underground pipes within the trench can increase the temporary storage capacity of the trench and can sometimes provide enough storage for flooding and/or stream channel erosion control (see **Figure 3.10-3**).

Conditions Where Practice Applies

An infiltration trench may be used where the subsoil is sufficiently permeable to provide a reasonable infiltration rate and where the water table is low enough to prevent pollution of groundwater.
Infiltration facilities are not recommended for areas where karst topography is present (in Virginia, west of the Blue Ridge Mountains) due to the possibility of causing subsurface collapse and sink hole formation.

<u>Drainage Area</u>

Infiltration trenches are not practical for large drainage areas. Generally, the drainage area for

infiltration trenches should be limited to 5 acres. Multiple trenches may be considered to control the runoff from a large site, but this also increases the associated maintenance responsibilities.

Development Conditions

Infiltration trenches are generally suited for low- to medium-density residential and commercial developments. They can be installed in multi-use areas, such as along parking lot perimeters, or in small areas that cannot readily support retention basins or similar structures. Infiltration trenches can be used in residential areas, commercial areas, parking lots and open space areas. Unlike most BMPs, trenches can easily fit into the margin, perimeter, or other unused areas of developed sites, making them particularly suitable for retrofitting in existing developments or in conjunction with other BMPs. A trench may also be installed under a swale to increase the storage of the related infiltration system. In all cases, pretreatment of the stormwater runoff to remove course sediment and particulate pollutants prior to entering the infiltration trench should be provided.

Planning Considerations

Appropriate soil conditions and protection of groundwater are two important considerations when planning for an infiltration trench. For further discussion, refer to the **Planning Considerations** previously discussed in **General Infiltration Practices, Minimum Standard 3.10**.

Design Criteria

The purpose of this section is to provide recommendations and minimum criteria for the design of infiltration trenches intended to comply with the runoff quality requirements of the Virginia Stormwater Management program.

General

Infiltration trenches are assumed to have rectangular cross-sections. Thus, the infiltration surface area (trench bottom) can be readily calculated from the trench geometry. The storage volume of the trench must be calculated using the void ratio of the backfill material that will be placed in it.

The same general criteria presented for the design of infiltration basins apply to trenches; the following information is provided for additional guidance.

Soils Investigation

A minimum of one soil boring log should be required for every 50 feet of trench length. A minimum of two soil boring logs should be required for each proposed trench location (Washington State DOE, 1992).

Topographic Conditions

Infiltration trenches should be located 20 feet down-slope and 100 feet up-slope from building foundations. An analysis should be completed to identify any possible adverse effects of seepage zones if there are nearby building foundations, basements, roads, parking lots or sloping sites. Developments on sloping sites often require the use of extensive cut and fill operations. **The use of infiltration trenches on fill sites is not permitted**.

Design Infiltration Rate

The design infiltration rate, f_d, should be set to equal one-half the infiltration rate obtained from the soil analysis. Therefore,

$$f_d = 0.5\,f$$

Maximum Storage Time and Trench Depth

All infiltration trenches should be designed to empty within 2 days following the occurrence of a storm event. Thus, a maximum allowable storage time, T_{max}, of 48 hours should be used.

The maximum depth for an infiltration **trench** may be defined as:

$$d_{max} = \frac{f_d T_{max}}{V_r}$$

Equation 3.10-5
Maximum Depth for Infiltration Trench

where:
d_{max} = maximum allowable depth of the facility, in ft;
f_d = design infiltration rate of the trench area soils, in ft/hr ($f_d = 0.5f$);
T_{max} = maximum allowable drain time = 48 hrs.;
V_r = void ratio of the stone reservoir expressed in terms of the percentage of porosity divided by 100 (0.4 typ.).

Refer to the Virginia Department of Transportation's Road and Bridge Specifications, latest edition, for information and specifications for coarse aggregates. A void ratio of 0.40 is assumed for stone reservoirs using 1.5 to 3.5 inch stone - VDOT No. 1 Coarse-graded Aggregate.

The minimum surface area of the facility bottom may be defined as:

$$SA_{min} = \frac{Vol_{wq}}{f_d T_{max}}$$

Equation 3.10-6
Infiltration Trench Minimum Bottom Surface Area

where: SA_{min} = minimum trench bottom surface area, in ft^2;
Vol_{wq} = water quality volume requirements, in ft^3;
f_d = design infiltration rate of the trench area soils, in ft/hr ($f_d = 0.5f$);
T_{max} = maximum allowable drain time = 48 hrs.

Runoff Pretreatment

Infiltration trenches should always be preceded by a pretreatment facility. Grease, oil, floatable organic materials, and settleable solids should be removed from the runoff before it enters the trench. Vegetated filters, sediment traps or forbays, water quality inlets (refer to **Minimum Standard 3.15, Manufactured BMP Systems**) are just a few of the available pretreatment strategies. To reduce both the frequency of turbulent flow-through and the associated scour and/or resuspension of residual material, infiltration trenches and associated pretreatment facilities should be installed off-line (MWCOG, 1992). Additional pretreatment arrangements are illustrated in **Figure 3.10-3**. Refer to the discussion on **Sediment Control** in **General Infiltration Practices**, **Minimum Standard - 3.10**.

A grass strip or other type of vegetated buffer at least 20 feet wide should be maintained around trenches that accept surface runoff as sheet flow. The slope of the filter strip should be approximately 1% along its entire length and 0% across its width. A recent study by MWCOG (Galli, 1992) concluded that for areas receiving high suspended solid loads, a minimum filter length of 50 feet is desirable.

All trenches with surface inlets should be engineered to capture sediment from the runoff before it enters the stone reservoir. Any pretreatment facility design should be included in the design of the trench, complete with maintenance and inspection requirements.

Backfill Material

Backfill material for the infiltration trench should be clean aggregate with a maximum diameter of 3.5 inches and a minimum diameter of 1.5 inches (i.e., VDOT No. 1 Open-graded Coarse Aggregate or equivalent). The aggregate should contain few aggregates smaller than the selected size. Void spaces for VDOT No. 1 aggregate is assumed to be 40 percent.

An 8 inch deep bottom sand layer (VDOT Fine Aggregate, Grading A or B) is required for all trenches to promote better drainage and reduce the risk of soil compaction when the trench is backfilled with stone (MWCOG, 1992).

Filter Fabric

The aggregate fill material should be surrounded with an engineering filter fabric as shown in **Figure 3.10-5**. For an aggregate surface trench, filter fabric should surround all of the aggregate fill material except the top one foot. A separate piece of fabric should be used for the top layer to act as a failure plane. This top piece can then be removed and replaced upon clogging. Note, however, that filter fabric should **not** be placed on the trench bottom. Refer to the VESCH 1992 edition, for filter fabric specifications.

Overflow Channel

Usually, because of the small drainage areas controlled by an infiltration trench, an emergency spillway is not necessary. However, the overland flow path taken by the surface runoff, when the capacity of the trench is exceeded, should always be evaluated. A nonerosive overflow channel leading to a stabilized watercourse should be provided, as necessary, to insure that uncontrolled, erosive, concentrated flow does not develop.

Observation Well

An observation well should be installed for every 50 feet of infiltration trench length. The observation well will show how quickly the trench dewaters following a storm, as well as providing a means of determining when the filter fabric is clogged and maintenance is needed (refer to **Figure 3.10-4**).

The observation well should consist of perforated PVC pipe, 4 to 6 inches in diameter. It should be installed in the center of the structure, flush with the ground elevation of the trench. Putting the observation well in a non-parking or traffic area to simplify inspections is best. The top of the well should be capped to discourage vandalism and tampering.

FIGURE 3.10 - 5
Filter Fabric Placement

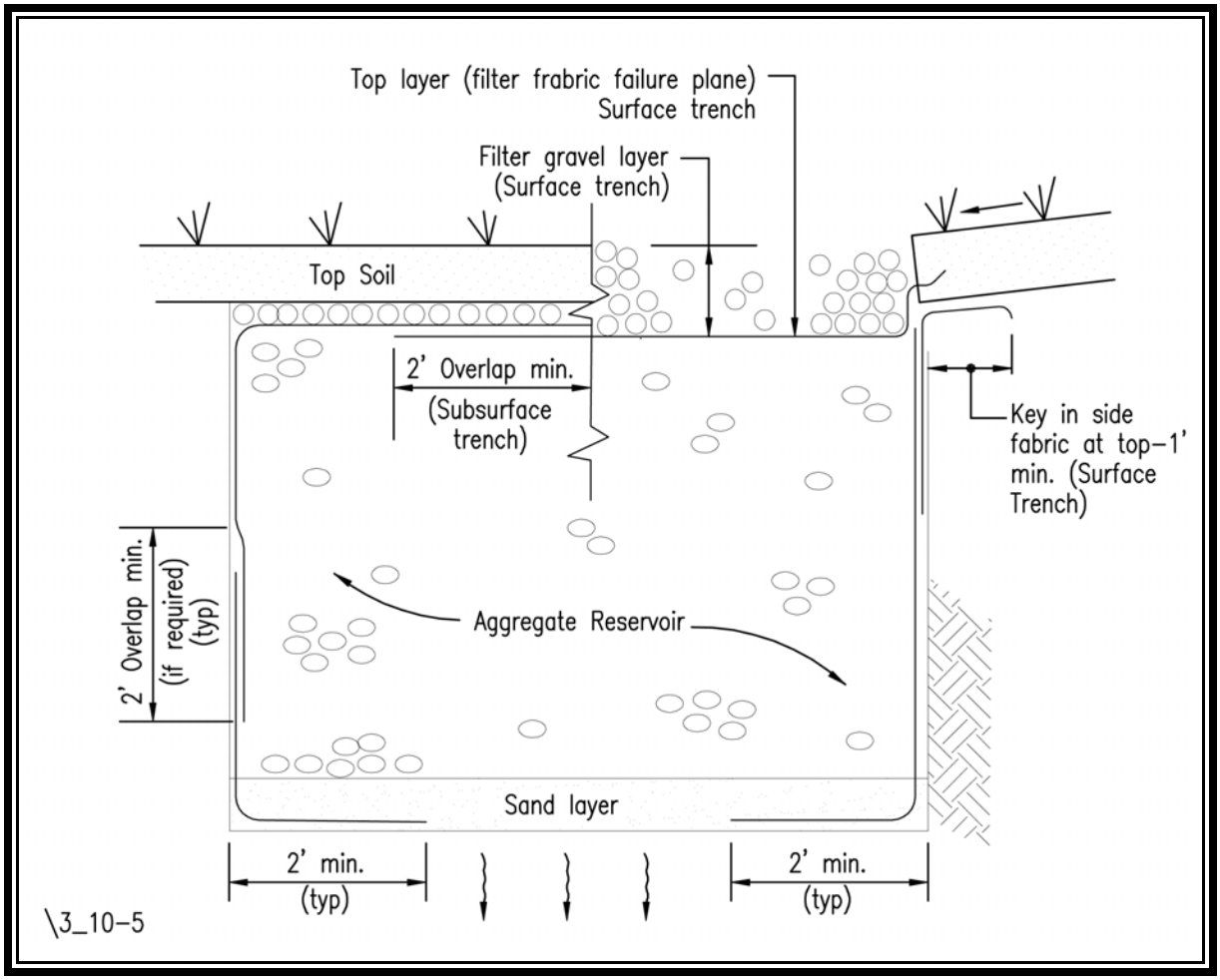

Construction Specifications

Overall, widely accepted construction standards and specifications, such as those developed by the USDA Soil Conservation Service or the U.S. Army Corps of Engineers, should be followed where applicable. Further guidance can be found in the Soil Conservation Service's Engineering Field Manual. Specifications for the work should conform to the methods and procedures indicated for installing earthwork, concrete, reinforcing steel, pipe, water gates, metal work, woodwork and masonry, as they apply to the site and the purpose of the structure. The specifications should also satisfy any requirements of the local government.

Construction of an infiltration trench should also be in conformance with the following:

Sequence of Construction

An infiltration trench should not be constructed or placed into service until all of the contributing drainage area has been stabilized. Runoff from untreated, recently constructed areas within the drainage area may load the newly formed trench and/or pretreatment facility with a large volume of fine sediment.

The specifications for the construction of an infiltration trench should state the following: 1) *the earliest point at which storm drainage may be directed to the trench*, and 2) *the means by which this delay in use is to be accomplished*. Due to the wide variety of conditions encountered among development projects, each project should be evaluated separately to postpone trench use for as long as possible.

Trench Preparation

Trench excavation should be limited to the specific trench dimensions. Excavated materials should be placed away from the trench sides to avoid impacting the trench wall stability.

The trench should be excavated with a backhoe or similar device that allows the equipment to stand away from the trench bottom. This bottom surface should be scarified with the excavator bucket teeth on the final pass to eliminate any smearing or shearing of the soil surface. Similarly, the sand filter material should be placed on the trench bottom so that it does not compact or smear the soil surface. The sand must be deposited ahead of the loader so the equipment is always supported by a minimum of 8 inches of sand.

Large tree roots must be trimmed flush with the trench sides to prevent the fabric from puncturing or tearing during subsequent installation procedures. No voids between the filter fabric and the excavation walls should be present. If boulders or similar obstacles are removed from the excavated walls, natural soils should be placed in these voids before the filter fabric is installed. The side walls

of the trench should be roughened where sheared and sealed by heavy equipment.

Vertically excavated walls may be difficult to maintain in areas where the soil moisture is high or where soft cohesive or cohesionless soils predominate. These conditions may require that the side slopes be laid back to maintain stability; trapezoidal rather than rectangular cross sections may result.

Fabric Laydown

The roll of filter fabric should be cut to the proper width before installation. The width should allow for perimeter irregularities plus a minimum 12-inch overlap at the top. When a fabric overlap is required elsewhere, the upstream section should overlap the downstream section by a minimum of 2 feet to ensure that the fabric conforms to the excavation surface during aggregate placement. Note that filter fabric should **not** be placed on the trench bottom.

Stone Aggregate Placement Compaction

The crushed stone aggregate should be placed in the trench in loose lifts of about 12 inches using a backhoe or front-end loader with a drop height near the bottom of the trench, and should be lightly compacted with plate compactors. Aggregate should not be dumped into the trench by a truck.

Backfill material for the infiltration trench should be clean, washed aggregate *1.5* to *3.5* inches in diameter (VDOT No. 1 Open-graded Coarse Aggregate or equivalent). The aggregate should contain few aggregates smaller than the selected size.

The 8 inch deep bottom sand layer should consist of VDOT Fine Aggregate, Grading A or B.

Overlapping and Covering

Following the stone aggregate placement, the filter fabric should be folded over the stone aggregate to form a 12-inch minimum longitudinal overlap. The desired fill soil or stone aggregate should be placed over the lap at sufficient intervals to maintain the lap during subsequent backfilling.

Potential Contamination

Clean aggregate **should not** be mixed with natural or fill soils. All contaminated aggregate should be removed and replaced with clean aggregate.

Traffic Control

To prevent or reduce compaction of the soil, heavy equipment and traffic should not travel over the infiltration trench.

Observation Well

Observation wells should be provided as specified in the design criteria. The depth of the well at the time of installation should be clearly marked on the well cap.

Maintenance / Inspection Guidelines

The following maintenance and inspection guidelines are not intended to be all-inclusive. Specific facilities may require other measures not discussed here.

Inspection Schedule

The observation well and pretreatment facility should be monitored quarterly and after every large storm event. It is recommended that a log book be maintained showing the depth of water in the well at each observation in order to determine the rate at which the facility dewaters after runoff producing storm events. Once the performance characteristics of the structure have been verified, the monitoring schedule can be reduced to an annual basis, unless the performance data suggest that a more frequent schedule is required.

Sediment Control

Sediment buildup in the top foot of stone aggregate or the surface inlet should be monitored on the same schedule as the observation well. A monitoring well in the top foot of stone aggregate should be provided when the trench has a stone surface. Sediment deposited should not be allowed to build up to the point where it will reduce the infiltration rate into the trench.

It is recognized that infiltration facilities are subject to clogging. Once a trench facility has clogged, very little can be done to correct it, short of excavating the facility. Maintenance efforts, therefore, should focus on the measures used for pretreatment of runoff, in addition to the facility itself.

Vegetation Maintenance

Any vegetated buffers associated with an infiltration trench should be inspected regularly and maintained as needed. Regular maintenance of the buffer is necessary to promote dense turf with extensive root growth, which subsequently enhances runoff filtering, prevents erosion and sedimentation, and deters invasive weed growth. Bare spots should be immediately stabilized and revegetated. Fertilizers should be applied only as necessary and in limited amounts to avoid contributing to pollution problems which the infiltration basin helps to mitigate. Consult the VESCH 1992 edition for appropriate fertilizer types and application rates.

Design Procedures

The following design procedure represents a generic list of the steps typically required for the design of an infiltration trench.

1. Determine if the anticipated development conditions and drainage area are appropriate for an infiltration trench application.

2. Determine if the soils (permeability, bedrock, water table, Karst, etc.) and topographic conditions (slopes, building foundations, etc.) are appropriate for an infiltration trench application.

3. Locate the infiltration trench on the site within topographic constraints.

4. Determine the drainage area for each infiltration trench and calculate the required water quality volume.

5. Evaluate the hydrology of the contributing drainage area to determine peak rates of runoff.

6. Design the infiltration trench:
   - design infiltration rate, $f_d = 0.5\,f$
   - max. storage time T_{max} = 48 hours
   - max. storage depth, d_{max}
   - stone backfill of clean aggregate (1.5" to 3.5") VDOT No. 1 Open-Graded Course Aggregate
   - sand layer on trench bottom (8 inches)
   - runoff pretreatment - concentrated input, sheet flow input
   - vegetated buffer around trench to filter surface runoff
   - filter fabric on trench sides and top (not on trench bottom) keyed into trench
   - overflow channel or large storm bypass
   - observation well

7. Provide material specifications.

8. Provide sequence of construction.

9. Provide maintenance and inspection requirements.

MINIMUM STANDARD 3.10C

ROOF DOWNSPOUT SYSTEM

Definition

A roof downspout system is an infiltration trench practice intended only for infiltrating rooftop runoff transported to the trench via roof downspout drains.

Purpose

The purpose of a roof downspout system is to provide water quality enhancement of rooftop runoff via infiltration of the water quality volume into the surrounding soils. This facility is not designed to infiltrate other surface water that could transport sediment or pollutants, such as from paved areas.

Conditions Where Practice Applies

Roof downspout systems may be used in any situation where disposing of rooftop runoff without direct connections to existing drainage systems or BMPs is acceptable and advantageous. Because of their small size, they are well suited for retrofitting in areas where runoff control of existing or new rooftop areas associated with building additions becomes necessary. As part of a low impact development strategy, roof downspout systems effectively disconnect the rooftop imperviousness from the drainage system which helps reduce the stormwater impact of the development. Use of roof downspout systems (or infiltration trenches in general) in residential areas should be used with caution due to concern for the potential lack of inspections and maintenance, and ultimate failure and abandonment of the facility.

Planning Considerations

The planning considerations for roof downspout systems are the same as those for infiltration trenches (**Minimum Standard 3.10B**). The drainage area is limited to the rooftop areas of residential and/or commercial structures.

Design Criteria

This section provides recommendations and minimum criteria for the design of roof downspout systems intended to comply with the runoff quality requirements of the Virginia Stormwater Management program.

The design criteria for roof downspout systems are the same as those for infiltration trenches with the following exceptions and/or additions:

Distance from Structures

Roof downspout systems should be a minimum of 10 feet down-slope from any structure or property line, and 30 feet from any septic tank or drain field.

Runoff Pre-Treatment

Gutters should be fitted with mesh screens to prevent leaf litter and other debris from entering the system in areas where there is tree cover. The expected growth of newly planted trees should be considered.

A pretreatment settling basin as shown in **Figure 3.10-6** should be provided on all roof downspout systems.

Overflow

An overflow outlet should be provided on the downspout at the surface elevation to allow flow to bypass the infiltration facility when it is full or clogged. (See **Figure 3.10-6**.)

Adequate surface drainage away from the structure should be provided according to appropriate building codes.

Construction Specifications

The construction specifications for roof downspout systems are the same as those for infiltration trenches.

Maintenance and Inspection Guidelines

Maintenance procedures are identical for those of an infiltration trench. Since these facilities are installed on individual buildings and other structures, provisions need to be made for their maintenance, especially when they are installed on single family dwellings. When flow is observed to be bypassing the facility, the system has clogged and should be evaluated for rehabilitation.

Design Procedures

The following design procedure represents a generic list of the steps typically required for the design of a roof downspout system.

1. Determine if the anticipated development conditions and rooftop areas are appropriate for a roof downspout system.

2. Determine if the soils (permeability, bedrock, water table, Karst, etc.) and topographic conditions (slopes, building foundations, etc.) are appropriate for a roof downspout system.

3. Locate the roof downspout system on the site within site topographic constraints.

4. Determine the roof area for each roof downspout system and calculate the required water quality volume.

5. Design the roof downspout system:
   - design infiltration rate, $f_d = 0.5\,f$
   - max. Storage time $T_{max} = 48$ hours
   - max. Storage depth, d_{max}
   - stone backfill of clean aggregate (*1.5*" to *3.5*" diameter) - VDOT No. 1 Open-graded Course Aggregate
   - sand layer on trench bottom (*8* inches
   - runoff pretreatment - concentrated input: gutter screens, settling basin
   - filter fabric on trench sides and top (not on trench bottom) keyed into trench
   - overflow channel or large storm bypass
   - observation well

6. Provide material specifications.

7. Provide sequence of construction.

8. Provide maintenance and inspection requirements.

FIGURE 3.10 - 6
Roof Downspout System with a Pretreatment Sump Basin

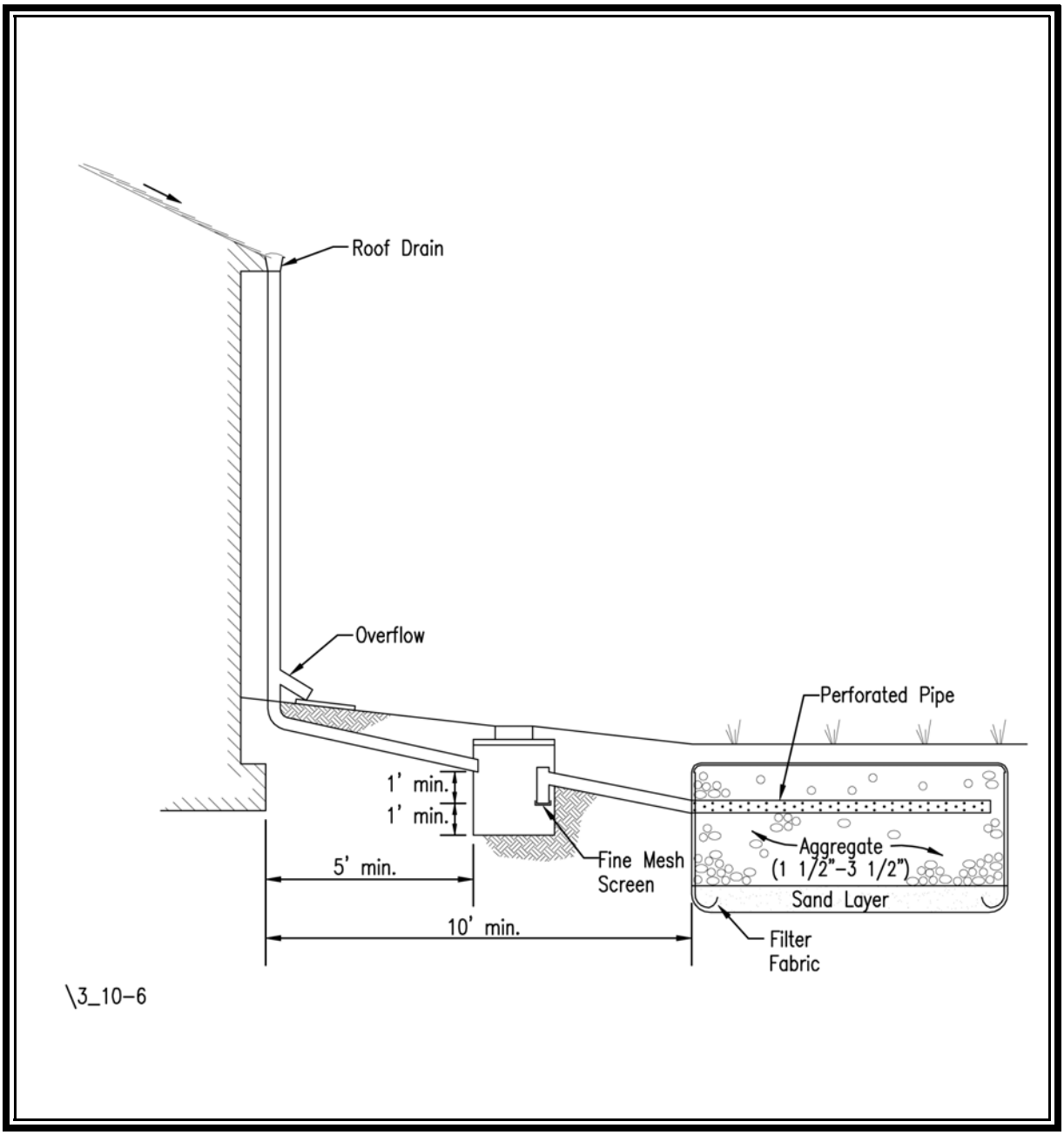

MINIMUM STANDARD 3.10D

POROUS PAVEMENT

Definition

Porous pavement is a pervious pavement placed over a stone reservoir that is installed above a permeable soil.

The two pavements discussed in this section are ***porous asphalt pavement*** and ***porous concrete pavement***. *Porous asphalt pavement* is an open-graded coarse aggregate, bound together by asphalt cement into a coherent mass, with sufficient interconnected voids to provide a high rate of permeability to water. A typical porous asphalt pavement cross-section is presented in **Figure 3.10-11**. *Pourous concrete pavement* consists of specially formulated mixtures of Portland Cement, uniform, open-graded coarse aggregate and potable water.

Purpose

The purpose of porous pavement is to provide water quality enhancement by infiltrating water through the paved surface and stone reservoir and into the underlying soils.

Conditions Where Practice Applies

Porous pavement is applicable as a substitute for conventional asphalt pavement on parking areas and low-traffic roadways if the grades, subsoil drainage characteristics and groundwater table conditions are suitable. Usually, the grades should be very gentle to flat, subsoil should have moderately rapid permeability ($f > 0.52$ *in/hr*) and the depth to the water table or bedrock should be at least 3 feet below the bottom of the stone reservoir. Parking lots, especially fringe or overflow parking areas, are suited for use with this paving material. Porous pavement should generally be installed on sites from 1/4 to 10 acres.

FIGURE 3.10 - 7
Porous Pavement Section

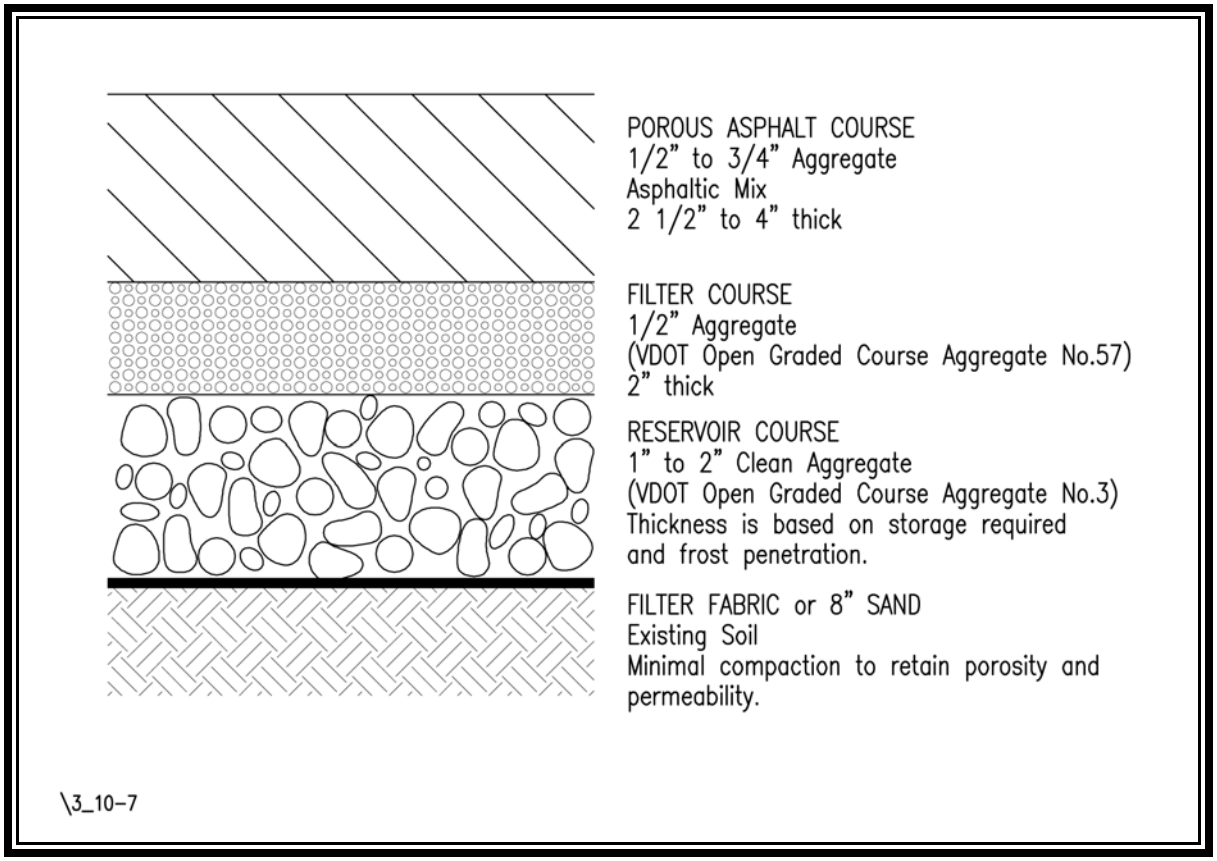

Planning Considerations

Porous pavement functions similar to infiltration trenches and, therefore, has similar planning considerations. Appropriate soil conditions and the protection of groundwater are among the important considerations which may limit its use. Refer to the **Planning Considerations** in **General Infiltration Practices**, **Minimum Standard 3.10** for additional discussion.

Generally, groundwater recharge rates are slightly higher under a porous pavement than under natural conditions, as vegetation is absent and water is not transpired during the summer months. Between 60% and 90% of the annual rainfall volume deposited on a porous pavement percolates into the ground (Washington DOE, 1992.)

It has been shown that porous pavement is more skid-resistant than conventional pavement in rainy weather and that the markings on a porous pavement are easier to see on rainy nights. In addition, studies have suggested that porous asphalt pavement is sufficiently strong and able to withstand freeze-thaw cycles and will last as long, structurally, as conventional pavement.

Typically, porous pavement is slightly more expensive than regular pavement. Additional costs associated with critical installation procedures and the availability of the asphalt mix may be offset by eliminating the need for curb and gutter, inlets, and conveyance systems. Availability is a consideration, since asphalt producers may not be willing to provide porous asphalt for small projects due to the demand for conventional asphalt mixes. For the production of a porous pavement mixture, the asphalt plant must be cleaned out to remove the fines not wanted in the porous mix. The cost of the stone reservoir and filter fabric associated with porous pavement is offset by the amount that would be spent on a stormwater facility elsewhere on the site.

Installation requires a very high level of workmanship throughout the construction process; porous pavement must be handled with great care in order for it to retain its porous qualities. Many pavement contractors and pavement engineers have limited experience in designing and constructing porous pavement. Improper installation can render a porous pavement design inoperative from the outset.

The biggest drawback to porous pavement is its tendency to clog if improperly maintained. Once it is clogged, it may have to be completely replaced since rehabilitating it is difficult and costly. On going maintenance of the pavement surface and specific limitations on the methods of snow and ice removal are often ignored and/or forgotten over time and with transfers of ownership. Clogging of the pavement surface from construction-related erosion can be prevented by waiting until all other phases of construction are complete and vegetation is stabilized before installing the pavement. Clogging of the pavement surface from natural circumstances is best prevented by installing it in areas that do not have highly erodible soils or steep slopes adjacent to the paved area.

Certain features can be incorporated into the design of porous pavement facilities to prolong the effective life of the system. One such feature is to “daylight” the aggregate base along the downslope edge of the pavement, forming a chimney drain into the stone storage under the pavement. The runoff can flow into the stone storage through the chimney drain if the pavement clogs.

If slow infiltration rates in the subgrade exist, porous pavement systems can be designed with an underdrain or collector system. When the collector system has a restriction plate on the outlet that controls the discharge, the stone reservoir can be designed as an underground stone-storage detention facility.

Evidence suggests that pollutants adsorb to the aggregate material, while particulates settle to the bottom of the aggregate layer. However, the target removal efficiency of 50% to 65%, as presented in **Table 3.10-1** for infiltration facilities, is too high for a stone-storage facility. **Therefore, a**

porous pavement facility with a stone storage underdrain system that provides positive drainage will be considered an extended-detention or detention facility. Its target pollutant removal efficiency will be based on the storage and release rate characteristics of these facilities as presented in **Minimum Standards 3.07, Extended-Detention**; and **3.08, Detention Basins**, until more information is collected to support the use of a higher pollutant removal efficiency.

Design Criteria

The purpose of this section is to provide recommendations and minimum criteria for the design of porous pavement intended to comply with the runoff quality requirements of the Virginia Stormwater Management programs.

The general design criteria for the porous pavement stone reservoir area and the underlying soils are the same as for infiltration trenches. Additional design is required for determining the porous pavement thickness. The design of the pavement is dependent on the strength of the sub-base soil, the projected traffic intensities, and the storage capacity of the reservoir and base.

A thorough examination of the site is of primary importance to the proper design and functioning of porous pavement. Soil and climate conditions, expected surface wear, and the use objectives of the porous surface should all be considered before designing the pavement.

The following represents a general list of design elements that should be considered in any porous pavement design:

1. Anticipated traffic intensities, defined by the ***average daily equivalent axle load*** (*EAL*).
2. ***California Bearing Ratio*** (CBR) of the soils.
3. Susceptibility of the soils to frost heave.

Due to the complexity of its design, a step-by-step procedure to engineer a porous pavement section will not be presented in this manual. **A professional engineer, with training and experience in porous pavement design and construction, should design the pavement section and supervise during the paving operation**.

Specific design requirements for a satisfactory ***porous asphalt pavement*** section equivalent to a conventional pavement design are available through the U. S. Department of Transportation's Federal Highway Administration and through other references listed at the end of this standard.

Specific design requirements for a satisfactory ***porous concrete pavement*** section are available through the Florida Concrete and Products Association, 649 Vassar Street, Orlando, Florida 32804. Other references are also listed at the end of this standard.

Porous Concrete Pavement Construction Specifications

The design criteria and material specifications for ***porous concrete pavement*** are **NOT INCLUDED** in this manual due their extreme complexity. Note that the methods of handling and placing porous concrete are different from other types of concrete. **Only concrete firms and contractors familiar with the intricacies of porous concrete should be used**. For further discussion, refer to **General Pavement Design Criteria** above.

Porous Asphalt Pavement Construction Specifications

The following construction specifications are general and typically represent aspects of design that require fine-tuning based on site conditions. A professional with experience in porous asphalt design should supervise construction to insure proper methods are used.

Overall, widely accepted construction standards and specifications, such as those developed by the USDA Soil Conservation Service or the U.S. Army Corps of Engineers, should be followed where applicable. Further guidance can be found in the Soil Conservation Service's Engineering Field Manual. Specifications for the work should conform to the methods and procedures specified for installing earthwork, concrete, reinforcing steel, pipe, water gates, metal work, woodwork and masonry, as they apply to the site and the purpose of the structure. The specifications should also satisfy any requirements of the local government.

The specifications for the asphalt mix should include:

1. Calculation of void space in the asphalt section.
2. Aggregate type, quality and gradation.
3. Asphalt cement grade in mix.
4. Asphalt content in mix.
5. Mixing temperature.

Construction of a porous asphalt pavement should also be in conformance with the following (adapted from Construction Sspecifications for the City of Rockville, Maryland:

Stabilization

To preclude premature clogging and/or failure, porous asphalt pavement should not be placed into service until all of the surface drainage areas contributing to the paved area have been effectively stabilized. Refer to the VESCH 1992 edition, for stabilization requirements.

Subgrade Preparation

1. Alter and refine the grades as needed to bring subgrade to required grades and sections as shown in the drawings.

2. The type of equipment used in subgrade preparation should not cause undue subgrade compaction. (Use tracked-equipment or equipment with oversized rubber tires **Do Not use standard rubber tire equipment**.) Traffic over the subgrade should be kept to a minimum. Where fill material is required, it should be compacted to a density equal to the undisturbed subgrade. Inherent soft spots should be corrected.

Trench Bottom

The trench bottom may be lined with filter fabric or an *8* inch layer of sand (VDOT Fine Aggregate, Grading A or B), based on the geotechnical and pavement design recomendations.

Reservoir course

1. The stone reservoir course aggregate should be 1 to 2 inch diameter clean, washed, crushed stone meeting VDOT specifications (Open Graded Course Aggregate No. 3).

2. The stone reservoir thickness (depth) is dependent on the storage volume requirements (water quality volume, quantity control volumes, etc.).

Filter Course

1. The filter course aggregate should be 1/2-inch diameter clean, washed, crushed stone, meeting VDOT specifications (Open-graded Course Aggregate No. 57).

2. The filter course thickness should be 2 inchs.

Porous Asphalt Surface Course

1. The surface course should be laid directly over the aggregate base course and should be laid in one lift.

2. The laying temperature should be between 230EF and 260EF, with a minimum air

temperature of 50EF, to make sure that the surface does not stiffen before compaction.

3. Compaction of the surface course should be completed while the surface is cool enough to resist a 10-ton roller. One or two passes of the roller are required for proper compaction. More rolling could cause a reduction in the surface course porosity.

4. The mixing plant should certify to the aggregate mix, the abrasion loss factor, and the asphalt content in the mix. The asphalt mix should be tested for its resistance to stripping by water using ASTD 1664. If the estimated coating area is not above 95%, antistripping agents should be added to the asphalt.

5. The mix should be transported to the site in a clean vehicle with smooth dump beds sprayed with a non-petroleum release agent. The mix should be covered during transportation to control cooling.

6. The asphalt mix should be 5.5 to 6% of dry aggregate by7 weight.

7. The asphalt's grade should meet AASHTO Specification M-20; 85 to 100% penetration road asphalt as a binder in the western part of the state, 65 to 80% in the piedmont area, and 50 to 65% in southeastern Virginia.

8. The aggregate grading should be as specified in **Table 3.10-3**.

Protection

After final rolling, no vehicular traffic of any kind should be permitted on the pavement until cooling and hardening has taken place, and never less than 6 hours (preferably 24 to 48 hours). All construction related traffic should be routed around or away from the porous pavement.

Workmanship

1. Work should be completed with expertise throughout the process and without staining or damage to other permanent work.

2. The transition between existing and new paving work should be neat and flush.

3. Finished paving should be even, without pockets, and graded to elevations shown.

4. All minor surface projections and edges adjoining other materials should be ironed smoothly to grade.

Certification

An appropriate professional should certify that these specifications were followed.

TABLE 3.10 - 3
Porous (Open-graded) Asphalt Concrete Formulation*

PROBABLE PARTICLE DATA						
Material	**Screen**	**Weight %**	**Volume %**	**Width *mm***	**Weight *g***	**No. In 100g of Asphalt Concrete**
Aggregate	**Through ½**	**2.8**	**2.2**	**10.7**	**1.667**	**1.7**
	Through 3/8	**59.6**	**46.3**	**8.0**	**.697**	**85.5**
	Through #4	**17.0**	**13.3**	**4.0**	**.087**	**195.4**
Sub-Total Coarse Aggregate		**79.4**	**61.8**			**282.6**
	Through # 8	**2.8**	**2.2**	**2.0**	**.0109**	**255.6**
	Through #16	**10.4**	**8.0**	**1.0**	**.00136**	**7647.**
	Through 200	**1.9**	**1.5**	**.06**	**.000294**	**6462.**
Asphalt		**5.5**	**10.5**			
Air		**0**	**16.0**			
TOTAL		**100.0**	**100.0**			

** Source: City of Rockville, Maryland (1982).*

Maintenance and Inspections

The following maintenance and inspection guidelines are not intended to be all-inclusive. Specific applications may require other measures not discussed here.

Inspection Schedule

The observation well should be checked quarterly and after every large storm event. It is recommended that a log book be maintained showing the depth of water in the well during each inspection in order to determine the rate at which the facility dewaters after runoff producing storms events. Once the performance characteristics of the structure have been verified, the monitoring schedule can be reduced to an annual basis, unless the performance data suggest that a more frequent schedule is required.

Maintenance

The surface of porous asphalt pavement must be cleaned regularly to prevent it from becoming clogged by fine material. This cleaning is best accomplished through the use of a vacuum cleaning street sweeper, followed by high pressure water washing. Outside of regular cleaning, porous pavement requires maintenance similar to that of regular pavement. In times of heavy snowfall, however, application of abrasive material should be closely monitored to avoid clogging problems once the snow and ice has melted. There are no maintenance measures designed to repair fully clogged porous pavement, other than replacement.

Design Procedures

The following design procedure represents a generic list of the steps typically required for the design of an infiltration trench.

1. Determine if the anticipated development conditions and drainage area are appropriate for a porous pavement application.

2. Determine if the soils (permeability, bedrock, water table, Karst, etc.) and site topographic conditions (slopes, etc.) are appropriate for a porous pavement application.

3. Locate the porous pavement section on the site within the topographic constraints.

4. Determine the drainage area for the porous pavement and calculate the required water quality volume.

5. Evaluate the hydrology of the contributing drainage area to determine peak rates of runoff.

6. Design the porous pavement stone reservoir:
   - design infiltration rate, $f_d = 0.5\,f$
   - max. storage time T_{max} = 48 hours
   - max. storage depth, d_{max}
   - stone backfill of clean aggregate (1.5" to 3.5") VDOT No. 1 Open-graded Course Aggregate
   - filter gravel layer - two inches of clean aggregate (1/2") VDOT No. 57 Open-graded Course Aggregate
   - sand layer on trench bottom (8 inche), or filter fabric, per geotechnical and pavement design recommendations
   - Filter fabric on trench sides and top (not on trench bottom) keyed into trench
   - Overflow channel or large storm bypass
   - Observation well

7. Provide pavement section design and material specifications.

8. Provide sequence of construction.

9. Provide maintenance and inspection requirements.

REFERENCES

(Compiled from Standards and Specifications for Infiltration Practices, Maryland Department of Natural Resources, 1987)

Bentall, R. Methods of Collecting and Interpreting Ground Water Data. U.S. Geological Survey, Water Supply Paper 1544-H, 1963, 97 pp.

Bianchi, W. C., and D. C. Muckel. Ground Water Recharge Hydrology. ARS 41-161, U.S. Department of Agriculture, 1970, 62 pp.

Cedergreen, H. R. Seepage, Drainage, and Flow Nets. New York: John Wiley and Sons, Inc., 1967.

Davis, S. N., and R. J. DeWiest. Hydrogeology. New York: John Wiley and Sons, Inc., 1966.

Ferris, J. G., D. B. Knowles, R. H. Brown, and R. W. Stallman. Theory of Aquifer Tests. U.S. Geological Survey, Water Supply Paper No. 1536-E.

Florida Concrete and Products Association. Design Manual. Orlando, FL.

Galli, John. Analysis of Urban BMP Performance and Longevity. Metropolitan Washington Council of Governments, 1992.

Hannon, J. B. Underground Disposal of Storm Water Runoff, Design Guidelines Manual. The California Department of Transportation in cooperation with the Federal Highway Administration, U.S. Department of Transportation, Washington, DC (FHWA-TS-80-218), February 1980.

Maryland Department of Natural Resources. Standards & Specifications for Infiltration Practices. 1987.

Northern Virginia Planning District Commission. Northern Virginia BMP Handbook. 1992.

Pettyjohn, W. A. Introduction to Artificial Ground Water Recharge. Robert S. Kerr Environmental Research Laboratory, U.S. Environmental Protection Agency. Worthington, Ohio: National Waterwell Association, 1981, 44 pp.

Rawls, W. J., D. L. Brakensiek, and K. E. Saxton. "Estimation of Soil Properties." Transactions of the American Society of Agricultural Engineers, Vol. 25, No. 5. 1982. p. 1316-1320.

Scheuler, T. R. Controlling Urban Runoff. Metropolitan Washington Council of Governments, 1987.

Scheuler, T. R., P. A. Kumble, and M. A. Heraty. A Current Assessment of Urban Best Management Practices. Metropolitan Washington Council of Governments, 1987.

Schmidt, C. J., and E.V. Clements. Reuse of Municipal Wastewater for Ground Water Recharge. U. S. Environmental Protection Agency, 1977, 183 pp.

Smith, R. W., J. M. Rice, and S. R. Spelman. Design of Open Graded Asphalt Friction Courses. Federal Highway Administration, U. S. Department of Transportation, FHWA-RD-74-2, 1974.

Soil Conservation Service, Engineering Division. Technical Release No. 36. Ground Water Recharge. U. S. Department of Agriculture, 1967, 22 pp.

Soil Conservation Service. National Engineering Handbook, Section 18 Ground Water. U. S. Department of Agriculture, 1968.

Soil Conservation Service. National Engineering Handbook, Section 8, Engineering Geology. U. S. Department of Agriculture, 1978.

Thelen, E., and L. F. Howe. Porous Pavement. Philadelphia, PA: The Franklin Institute Press, 1978.

Thelen, E., et al. Investigation of Porous Pavements for Urban Runoff Control. Franklin Institute Research Laboratories for the U.S. Environmental Protection Agency, NTIS PB-227-5. Springfield, VA, 1972.

Todd, D. K. Ground Water Hydrology. New York: John Wiley and Sons, Inc., 1959.

U. S. Environmental Protection Agency, Office of Water Programs Operations. Design Manual: Onsite Wastewater Treatment and Disposal Systems. U.S. EPA 20460, October 1980.

Virginia Department of Conservation and Recreation. Virginia Erosion and Sediment Control Handbook (VESCH). Richmond, Virginia: 1992.

Virginia State Water Control Board. Best Management Practices Handbook: Urban: Planning Bulletin 321. Richmond, Virginia, 1979.

Washington State Department of Ecology. Stormwater Management Manual for the Puget Sound Basin. 1992.

Wenzel, L. K. Methods of Determining Permeability of Water Bearing Materials. U. S. Geological Survey, Water Supply Paper 887, 1942.

Surface Infiltration Trench. Note grass strip pre-treatment holds heavier particulate pollutants within paved area.

Porous Pavement Infiltration. Testing new pavement installation. Note: steady flow passes through pavement and into stone storage below with minimal spread.

General Infiltration Practices

Chapter 3.10

Infiltration Basin serves as landscaped pedestrian area during dry periods.

Infiltration Trench with concrete parking pavers in office park setting.

General Infiltration Practices

MINIMUM STANDARD 3.11

BIORETENTION BASIN PRACTICES

3.11A **Bioretention Filters**

3.11B **Green Alleys**

View BMP Images

LIST OF ILLUSTRATIONS

#	FIGURES	PAGE
3.11-1	Bioretention Basin	3.11-2
3.11-2	Bioretention Basin At Edge of Parking Lot with Curb	3.11-5
3.11-3	Bioretention Basin In a Planting Island In a Parking Lot	3.11-6
3.11-4	Bioretention Basin Adjacent to a Drainage Swale	3.11-7
3.11-5	Bioretention Basin At Edge of Parking Lot with out Curbs	3.11-8
3.11-6	Upflow Inlet for Bioretention Basin	3.11-12
3.11-7	Grading Plan for Bioretention Basin	3.11-18
3.11-8	Sample Planting Plan	3.11-21
3.11A-1	Bioretention Filter	3.11A-2

#	TABLES	PAGE
3.11-1	Pollutant Removal Efficiencies for Bioretention Basins	3.11-4
3.11-2	Pretreatment Filter Strip Sizing Guidance	3.11-11
3.11-3	Pretreatment Grass Channel Sizing Guidance for a 1.0 Acre Drainage Area	3.11-12
3.11-4	Basin Sizing Summary	3.11-14
3.11-5	Recommended Tree and Shrub Spacing	3.11-20
3.11-6	Example Maintenance Schedule for Bioretention Basin	3.11-32

LIST OF ILLUSTRATIONS Contd.

#	TABLES	PAGE
3.11-7	Recommended Plant Species for Use in Bioretention	3.11-33
3.11A-1	Pollutant Removal Efficiencies for Bioretention Filter	3.11A-3
3.11A-2	Clay Liner Specifications	3.11A-6
3.11A-3	Geotextile Specifications for Basin Liner “Sandwich”	3.11A-7

MINIMUM STANDARD 3.11

BIORETENTION BASINS

Definition

Bioretention is an innovative BMP developed by the Prince George's County, Maryland Department of Environmental protection. The following information is drawn from their ***Design Manual for Use of Bioretention in Stormwater Management*** (P.G. County, 1993) unless otherwise noted. This technology is also referred to as "Rain Gardens."

Figure 3.11-1 illustrates the Maryland bioretention (Rain Garden) concept as adapted for use in Virginia. There are seven major components to the bioretention area (Rain Garden): 1) the grass buffer strip; 2) the ponding area; 3) the surface mulch and planting soil; 4) the sand bed (optional); 5) the organic layer; 6) the plant material, and 7) the infiltration chambers. Each component is critical to sustaining a properly functioning BMP.

Purpose

Bioretention basins are used primarily for water quality control. However, since they capture and infilter part of the stormwater from the drainage shed, they may provide partial or complete control of streambank erosion and partial protection from flooding (depending on the volume of water being captured and infiltered).

Bioretention facilities (Rain Gardens) are planting areas installed in shallow basins in which the stormwater runoff is treated by filtering through the bed components, biological and biochemical reactions within the soil matrix and around the root zones of the plants, and infiltration into the underlying soil strata. Properly constructed bioretention areas replicate the ecosystem of an upland forest floor through the use of specific shrubs, trees, ground covers, mulches and deep, rich soils. Since almost all bioretention basins are intended to be visual landscape amenities as well as stormwater BMPs, aesthetic considerations may be equally as important in their use as proper engineering. Bioretention design requires participation by a person with appropriate design skills and a working knowledge of indigenous horticultural practices, preferably a Landscape Architect.

Water Quality Enhancement

Bioretention basins enhance the quality of stormwater runoff through the processes of adsorption, filtration, volitization, ion exchange, microbial and decomposition prior to exfiltration into the surrounding soil mass. Microbial soil processes, evapotranspiration, and nutrient uptake in plants also come into play (Bitter and Bowers, 1995).

FIGURE 3.11 - 1
Bioretention Basin

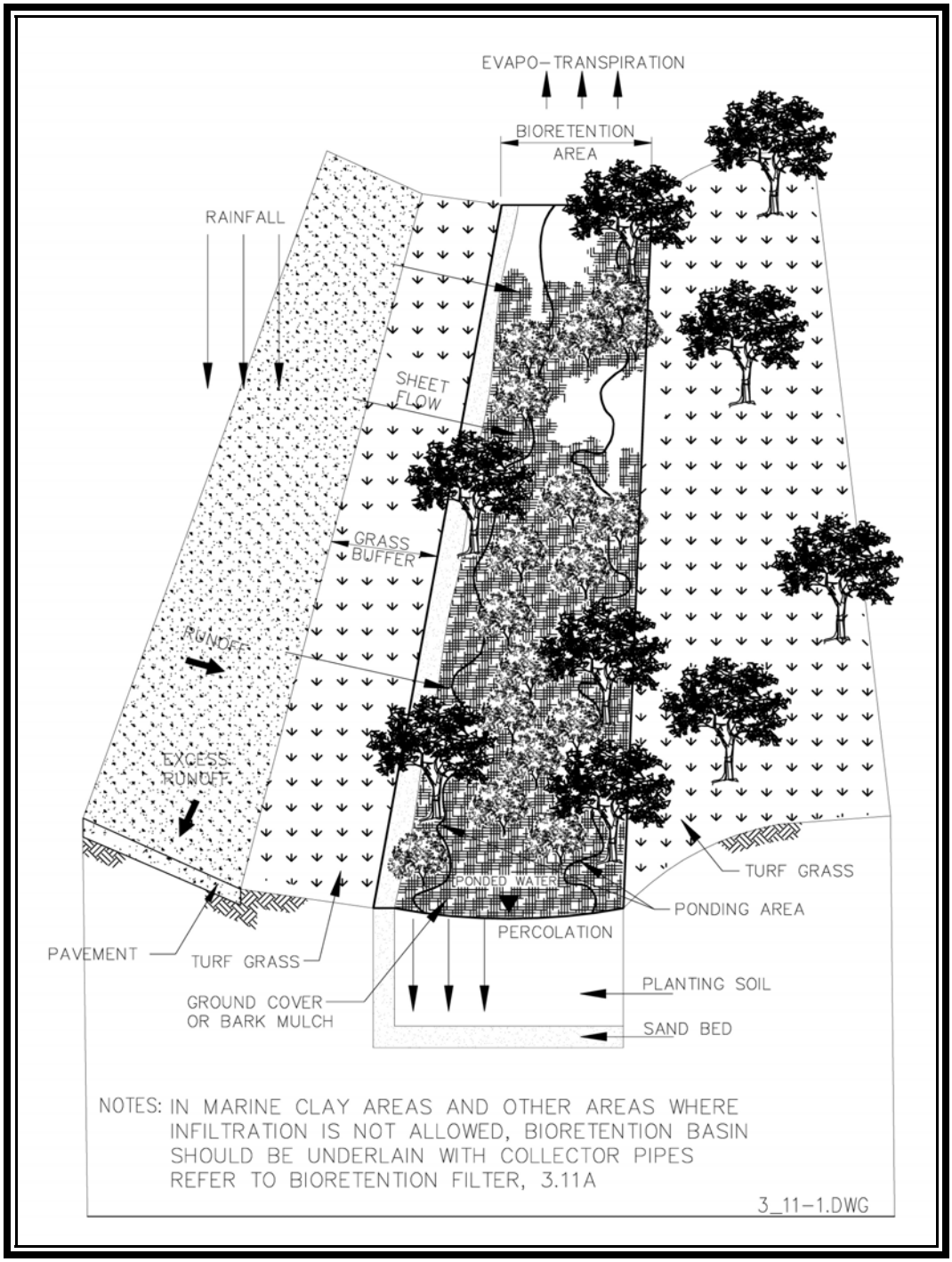

The **grass buffer strip** filters particles from the runoff and reduces its velocity. The **sand bed** further slows the velocity of the runoff, spreads the runoff over the basin, filters part of the water, provides for positive drainage to prevent anaerobic conditions in the planting soil and enhances exfiltration from the basin. The **ponding area** functions as storage of runoff awaiting treatment and as a presettling basin for particulates that have not been filtered out by the grass buffer. The **organic or mulch layer** acts as a filter for pollutants in the runoff, protects the soil from eroding , and provides an environment for microorganisms to degrade petroleum-based solvents and other pollutants. The **planting soil layer** nurtures the plants with stored water and nutrients. Clay particles in the soil adsorb heavy metals, nutrients, hydrocarbons, and other pollutants. The **plant species** are selected based on their documented ability to cycle and assimilate nutrients, pollutants, and metals through the interactions among plants, soil, and the organic layer (*ibid*). By providing a variety of plants, monoculture susceptibilities to insect and disease infestation are avoided, and evapotranspiration is enhanced. The **vented infiltration chambers** provide unobstructed exfiltration through the open-bottomed cavities, decrease the ponding time above the basin, and aerate the filter media between storms through the open chamber cavities and vents to grade, preventing the development of anaerobic conditions. By providing a valve equipped drawdown drain to daylight, the basin can be converted into a soil media filter should exfiltration surface failures occur.

Perforated underdrain systems are recommended for facilities placed in residential areas and in all areas where the in-situ soils are questionable. Refer to **3.11A - Bioretention Filter**.

The minimum width for a bioretention area is usually 10 feet, although widths as narrow as 4 feet may be used if the runoff arrives as dispersed sheet flow along the length of the facility from a properly sized vegetated strip. The minimum length should be 15 feet (for lengths greater than 20 feet, the length should be at least twice the width to allow dispersed sheet flow). As an infiltration BMP, the maximum ponding depth is restricted to six inches to restrict maximum ponding time to preclude development of anaerobic conditions in the planting soil (which will kill the plants) and to prevent the breeding of mosquitoes and other undesirable insects in the ponded water. The planting soil must have sufficient depth to provide appropriate moisture capacity, create space for the root systems, and provide resistance from windthrow (Minimum depth equal to the diameter of the largest plant root ball plus 4 inches).

Table 3.11-1 contains the target removal efficiencies once a **mature** plant community is created in the bioretention areas based on the volume of runoff to be captured and infiltered.

Flood Control and Channel Erosion

The amount of flood and channel erosion control provided by bioretention basins depends on the local rainfall frequency spectrum, the amount of pre-development (or pre-redevelopment) impervious cover, the amount of post-development impervious cover, and the volume of runoff captured and infiltered by the basin(s). The effect of the BMPs on peak flow rates from the drainage shed must be examined. As with other infiltration practices, bioretention basins tend to reverse the consequences of urban development by reducing peak flow rates and providing groundwater discharge.

TABLE 3.11-1
Pollutant Removal Efficiencies for Bioretention Basins

BMP Description	Target Phosphorus Removal Efficiency
Bioretention basin with capture and treatment volume equal to 0.5 inches of runoff from the impervious area.	50%
Bioretention basin with capture and treatment volume equal to 1.0 inches of runoff from the impervious area.	65%

Conditions Where Practice Applies

Bioretention basins are suitable for use on any project where the subsoil is sufficiently permeable to provide a reasonable rate of infiltration and where the water table is sufficiently lower than the design depth of the facility to prevent pollution of the groundwater. Bioretention basins are generally suited for almost all types of development, from single-family residential to fairly high density commercial projects. They are attractive for higher density projects because of their relatively high removal efficiency. **Figures 3.11-2** through **3.11- 5** illustrate several applications. Bioretention basins may also be installed in off-line pockets along the drainage swales adjacent to highways or other linear projects, as illustrated in **Figure 3.11-6**. For large applications, several bioretention basins connected by an underground infiltration trench ("Green Alleys") are preferable to a single, massive basin. Such a system is especially desirable along the landward boundary of reduced Chesapeake Bay Resource Protection Areas. **Minimum Standard 3.11B** discusses this system. Considering the character of bioretention basins, some jurisdictions may qualify them as buffer restoration.

FIGURE 3.11 - 2
Bioretention Basin at Edge of Parking Lot With Curb

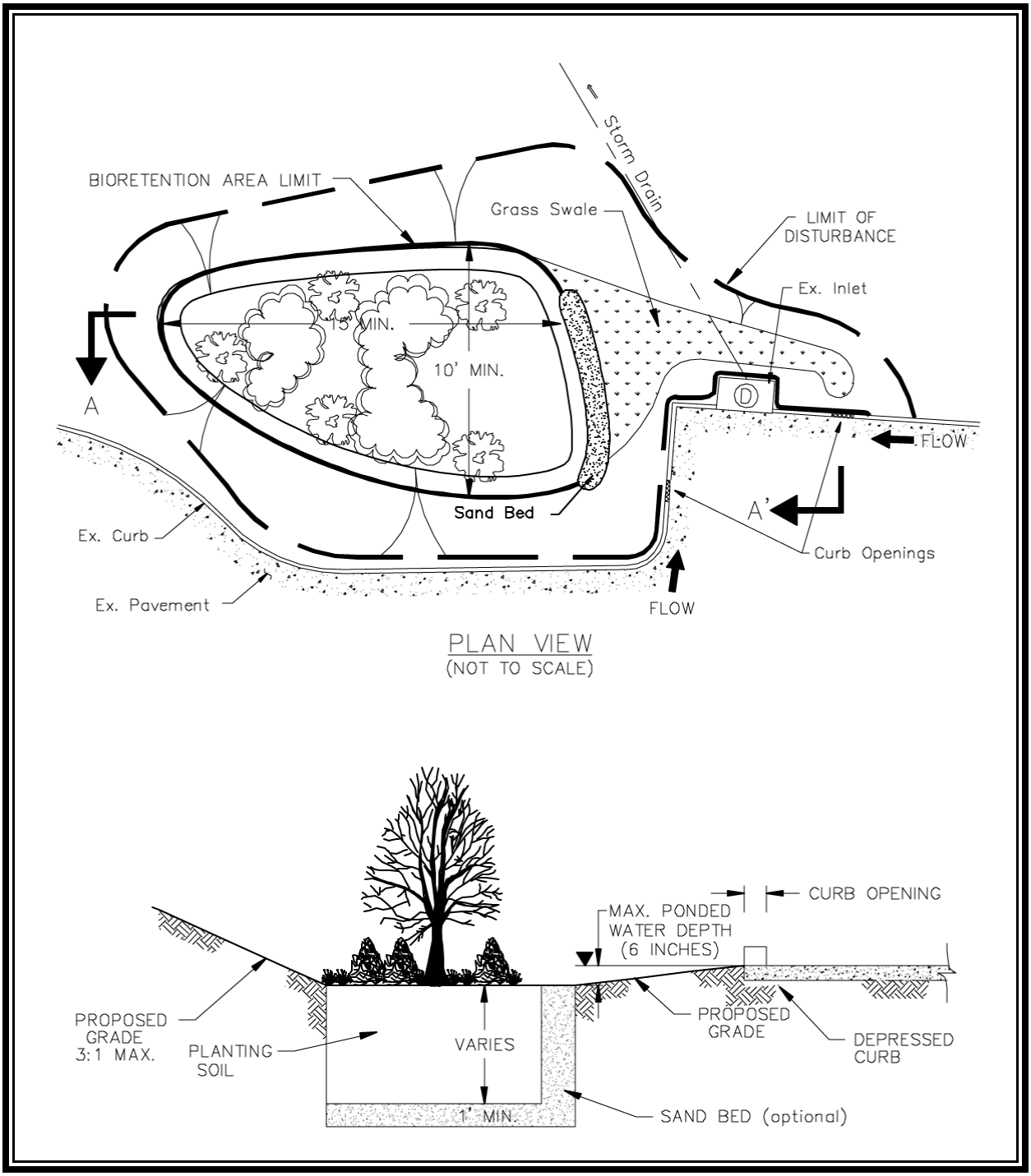

FIGURE 3.11 - 3
Bioretention Basin in a Planting Island in a Parking Lot

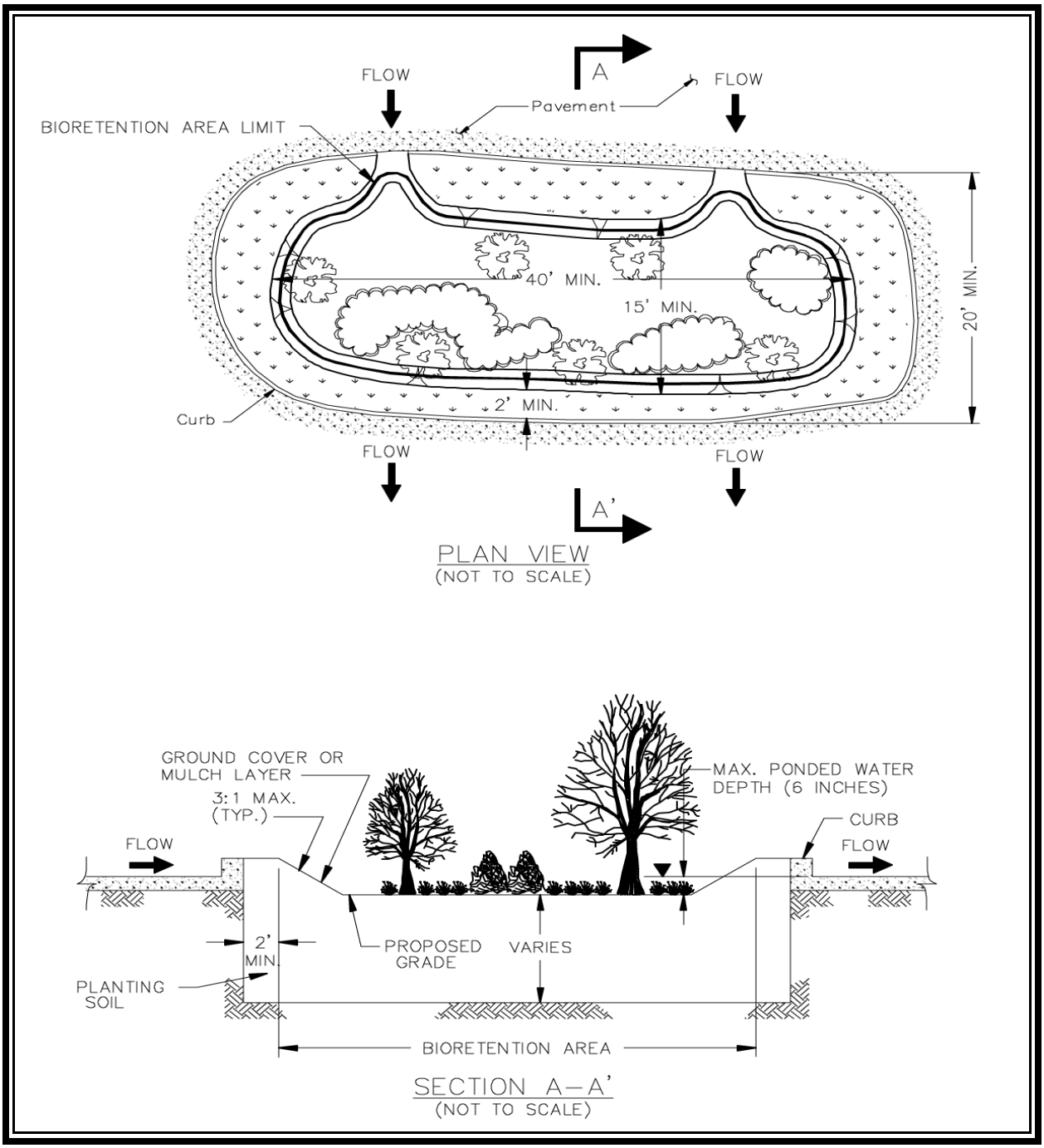

FIGURE 3.11-4
Bioretention Basin Adjacent to a Drainage Swale

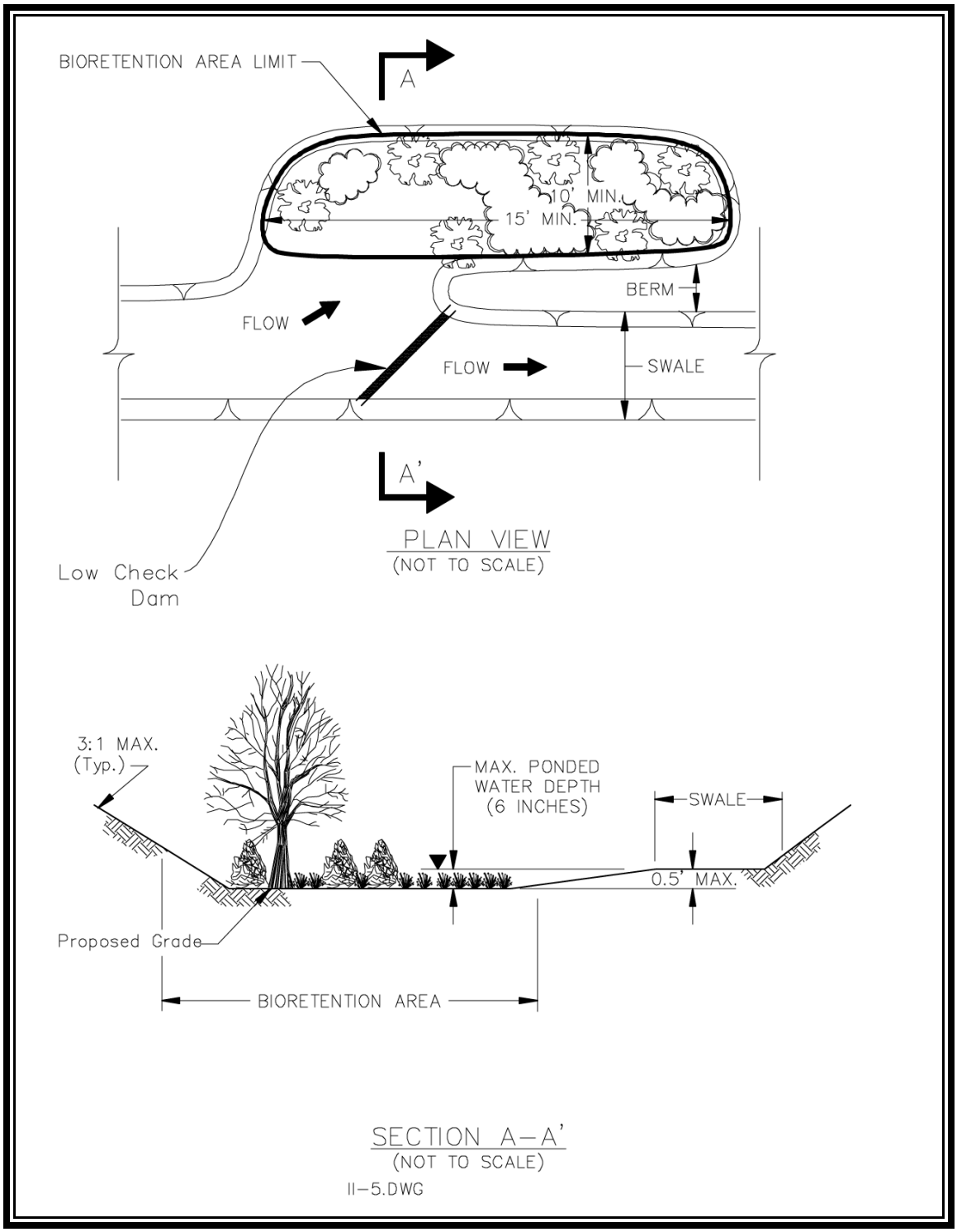

FIGURE 3.11-5
Bioretention Basin at Edge of Parking Lot Without Curbs

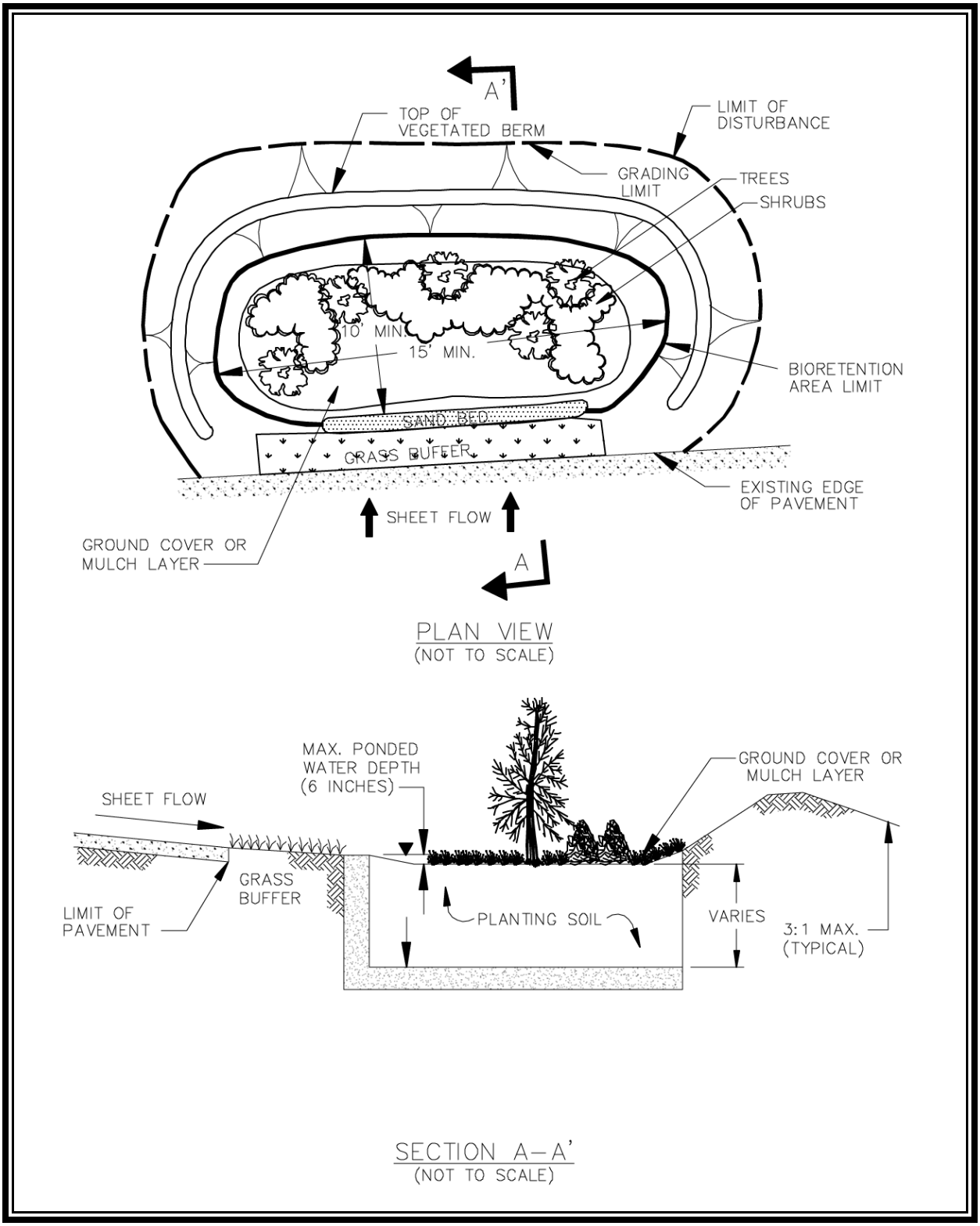

Planning Considerations

Site Conditions

All of the Site Conditions considerations for general infiltration practices contained in **MINIMUM STANDARD 3.10** also apply to bioretention basins. Designers should also be mindful of local requirements for soil studies for infiltration practices such as those in the ***Northern Virginia BMP Handbook***. In addition to site conditions affecting infiltration practices in general, the following apply specifically to bioretention basins. The application of individual bioretention basins will usually be limited to drainage areas from 0.25 to 1 acre. Generally, commercial or residential drainage areas exceeding 1 acre in size will discharge sheet flows greater than 5 cfs.

1. Location Guidelines

Preferable locations for bioretention basins include 1) areas upland from inlets or outfalls that receive sheet flow from graded areas, and 2) areas of the site that will be excavated or cut. When available, areas of loamy sand soils should be used since these types of soils comprise the planting soils for bioretention basins. Locating the BMP in such natural locations would eliminate the cost of importing planting soils (see soil and organic specification under **Design Considerations**). BMP location should be integral with preliminary planning studies.

The following areas would be **undesirable** for bioretention basins: 1) areas that have mature trees which would have to be removed for construction of the bioretention basin, 2) areas that have existing slopes of 20% or greater, and 3) areas above or inclose proximity to an unstable soil strata such as marine clay.

2. Sizing Guidelines

For planning purposes, assume that the floor area of the bioretention basin will be a minimum of 2.5% of the impervious area draining to the basin if the first 0.5 inches of runoff is to be treated and a minimum of 4.0% of the impervious area on the drainage shed if the first 1.0 inches of runoff is to be treated. Derivation of these values is discussed below under **Design Considerations**. Note that small projects such as single family residences will likely default to the minimum 150 square foot area (10' X 15').

3. Aesthetic Considerations

Aesthetic considerations of the bioretention basin must be considered early in the site planning process. While topography and hydraulic considerations may dictate the general placement of such facilities, overall aesthetics of the site and the bioretention basins must be integrated into the site plan and stormwater concept plan from their inception. Both the stormwater engineer and the Landscape Architect must participate during the layout of facilities and infrastructure to be placed on the site. Bioretention design must be an integral part of the site planning process.

Sediment Control

Like other infiltration practices, provisions for long-term sediment control must be incorporated into the design, **as well as precautions during on-site construction activities.** Careful consideration must be given **in advance of construction** to the effects of work sequencing, techniques, and equipment employed on the future maintenance of the practice. Serious maintenance problems can be averted, or in large part, mitigated, by the adoption of relatively simple measures during construction.

1. Construction Runoff

Bioretention basin BMPs should be constructed AFTER the site work is complete and stabilization measures have been implemented. If this is not possible, strict implementation of E&S protective measures must be installed and maintained in order to protect the bioretention facility from premature clogging and failure.

Like other infiltration BMPs, bioretention basins constructed prior to full site stabilization will become choked with sediment from upland construction operations, rendering them inoperable from the outset. Simply providing inlet protection or some other filtering mechanism during construction will not adequately control the sediment. One large storm may completely clog the bioretention basin, requiring complete **reconstruction**.

Experience with infiltration practices has also demonstrated that the bioretention basin site should **NOT** be used as the site of sedimentation basins during construction. Such use tends to clog the underlying strata and diminish their capacity to accept infiltration below that indicated in preconstruction soil studies.

Bioretention basins are landscape amenities and should be installed with other landscaping as the last stage of project construction.

A detailed sediment control design to protect the bioretention basin **during** its construction should be included with the facility design. The ***Virginia Erosion and Control Handbook*** (VDCR, 1992), ***Standards and Specifications for infiltration Practices*** (Md. DNR, 1984), and ***Controlling Urban Runoff*** (MWCOG, 1987) provide technical guidance on sediment control designs.

Experience with bioretention basins in Maryland has demonstrated that they must be protected until the drainage areas contributing to the practice have been adequately stabilized (P.G. Co., 1993).

The definition of the term "adequately stabilized" is critical to the success of the facility. At the conclusion of construction activity, the temporary erosion and sediment control measures are usually removed at the direction of the erosion and sediment control inspector when, at a minimum,

stabilization measures such as seed and mulch are in place. This does not mean, however, that stabilization has actually occurred. Bioretention basins must be protected until stabilization of the upland site is functioning to control the sediment load from denuded areas. Provisions to bypass the stormwater away from the bioretention basin during the stabilization period should be implemented.

2. Urban Runoff

A fully stabilized site will generate particulate pollutant load resulting from natural erosion, lawn and garden debris such as leaves, grass clippings, mulch, roadway sand, etc. Pretreatment of runoff to remove sediments prior to entering the bioretention basin is usually provided by a grass filter strip or grass channel. When runoff from sheet flow from such areas as parking lots, residential yards, etc., is involved, a grass filter strip, often enhanced with a pea gravel diaphragm, is usually employed. **Table 3.11-2** provides sizing guidelines as a function of inflow approach length, land use, and slope. The minimum filter strip length (flow path) should be 10 feet.

TABLE 3.11-2
Pretreatment Filter Strip Sizing Guidance
(Source: Claytor and Schueler, 1996)

Parameter	Impervious Parking Lots				Residential Lawns				Notes
Maximum Inflow Approach Length (feet)	35		75		75		150		
Filter Strip Slope	≤ 2%	≥2%	≤2%	≥2%	≤2%	≥2%	≤2%	≥2%	Maximum = 6%
Filter Strip Minimum Length	10'	15'	20'	25'	10'	12'	15'	18'	

For applications where concentrated runoff enters the bioretention basin by surface flow, such as through a slotted curb opening, a grassed channel, often equipped with a pea gravel diaphragm to slow the velocity and spread out the flow entering the basin, is the usual pretreatment method. The length of the grassed channel depends on the drainage area, land use, and channel slope. **Table 3.11-3** provides recommendations on sizing for grass channels leading into a bioretention basin for a one acre drainage area. The minimum grassed channel length should be 20 feet.

"Grassed filter strips, grassed channels, and side-slopes of the basin should be **sodded with mature sod** prior to placement of the bioretention basin into operation. Simply seeding these areas will likely result in conveyance of sediments into the basin and premature failure. Wrapping of the planting soil mixture up the side slopes beneath the sod is also recommended."

TABLE 3.11-3
Pretreatment Grass Channel Sizing Guidance for a 1.0-Acre Drainage Area
(Source: Claytor and Schueler, 1996)

Parameter	≤ 33% Impervious		Between 34% and 66% Impervious		≥ 67% Impervious		Notes
Slope	≤2%	≥2%	≤2%	≥2%	≤2%	≥2%	Maximum slope = 4%
Grassed channel minimum length (feet)	25	40	30	45	35	50	Assumes a 2' wide bottom width

FIGURE 3.11-6
Upflow Inlet for Bioretention Basin
(Source: City of Alexandria)

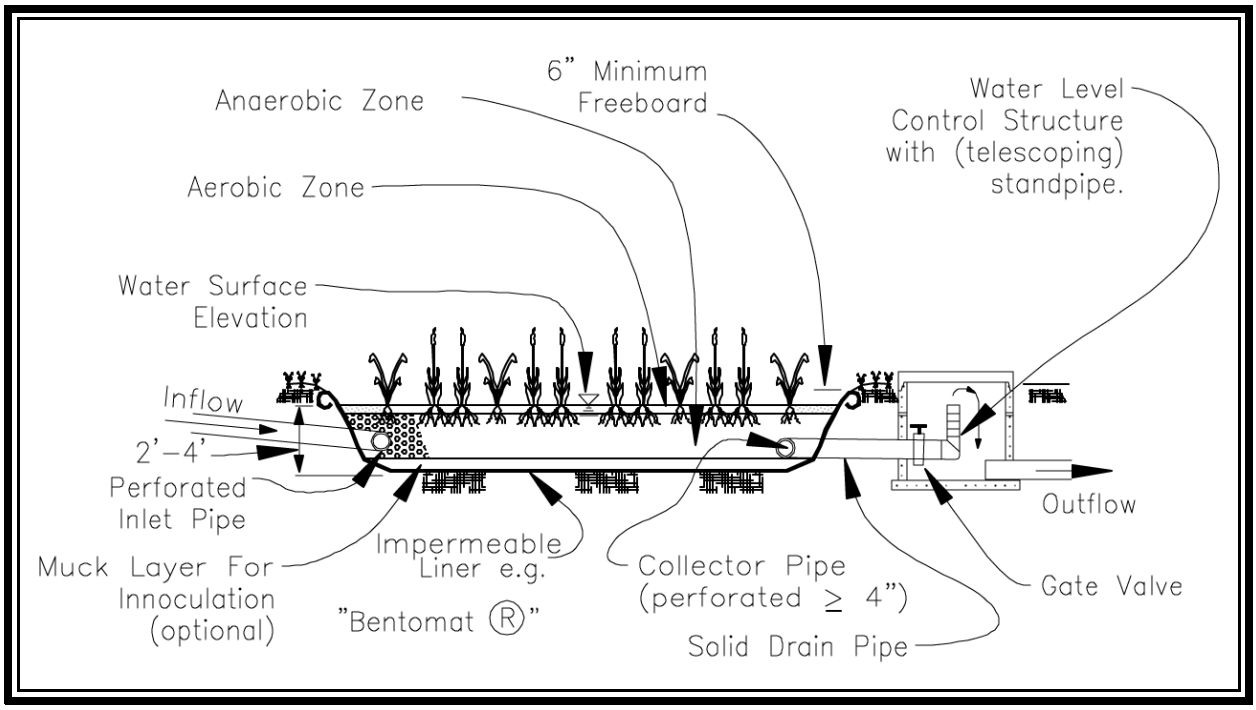

When concentrated piped flow from impervious areas such as parking lots is routed to a bioretention basin, an energy absorbing and sedimentation structure in which the flow rises into the basin like a tide is usually advisable. Since sediments must usually be removed from such structures on a regular basis, they must be placed in locations where the extension booms on vacuum trucks may easily reach them. **Figure 3.11-6** illustrates an upflow inlet structure for a bioretention basin. Maintenance requirements for pretreatment measures are discussed **Maintenance/Inspection Guidelines**.

General Design Criteria

The purpose of this section is to provide minimum criteria for the design of bioretention basin BMPs intended to comply with the Virginia Stormwater Management program's runoff quality requirements. Bioretention basins which capture and infilter the first 1 inch of runoff from impervious surfaces may also provide streambank erosion protection.

General

The design of bioretention basins should be in accordance with the following Minimum Standards where applicable: **3.1: Earthen Embankments, 3.2: Principal Spillways, 3.3: Vegetated Emergency Spillways, 3.4: Sediment Forebay, 3.10: General Infiltration Practices, and 3.10A: Infiltration Basin,** as well as the additional criteria set forth below. The designer is not only responsible for selecting the appropriate components for the particular design but also for ensuring long-term operation.

Soils Investigation

Refer to the **Planning Considerations** and **Design Criteria** of **General Infiltration Practices, MS-3.10**, and to local jurisdiction soil study requirements such as Chapter 5, Section V. of the ***Northern Virginia BMP Handbook***. As with infiltration basins (**MS3.10A**), a minimum of one soil boring log should be required for each 5,000 square feet of bioretention basin area (plan view area) and in no case less than three soil boring logs per basin.

Topographic Conditions

Like other infiltration facilities, bioretention basins should be a minimum of 50 feet from any slope greater than 15 percent. A geotechnical report should address the impact of the basin upon the steep slope (especially in marine clay areas). Also, bioretention basins should be a minimum of 100 feet up-slope and 20 feet downslope from any buildings.

Basin Sizing Methodology

In Virginia, bioretention basins are designed to exfilter the treatment quantity into the underlying soil strata, or into an underlying perforated underdrain system connected to a storm drain system or other outfall when the underlying soils, proximity to building foundation, or other such restrictions preclude the use of infiltration. When such an underdrain system is used, the facility is referred to as a **Bioretention Filter - Minimum Standard 3.11A**.

Recent research at the University of Maryland has supported a reduction in overall depth of the planting soil to 2.5 feet. Generally, the soil depth can be designed to a minimum depth equal to the diameter of the largest plant root ball plus 4 inches. The recommended soil composition was revised to reduce the clay and increase the sand content (Refer to Soil Texture and Structure later in this

standard). This revised soil composition also eliminated the 12" sand layer at the bottom of the facility. The researchers concluded that significant pollutant reductions are achieved in the mulch layer and the first 2 to 2.5 feet of soil.

The elevation of the overflow structure should be 0.5 feet above the mulch layer of the bioretention bed. When an underdrain system is used (Min. Std. 3.11A), the overflow can be as much as 1.0 feet above the mulch layer.

The size of the bioretention facility is dictated by the amount of impervious surface in the contributing drainage area. For facilities capturing the first 0.5 inches of runoff from the impervious areas in the drainage shed, the surface area of the bioretention bed should be a minimum of 2.5% of the impervious area, or 1,090 square feet per impervious acre. For facilities capturing the first 1.0 inch of runoff, the bioretention bed should be a minimum of 5.0% of the impervious area, or 2,180 square feet per impervious acre.

The minimum width and length is recommended at 10 feet and 15 feet respectively. (Widths as narrow as 4 feet may be used if the runoff arrives as dispersed sheet flow along the length of the facility from a properly sized vegetated strip).

The elevation of the overflow structure should be 0.5 feet above the mulch elevation of the bioretention bed.

Note that small projects such as single family residences may default to the minimum (10' X 15') 150 square foot area.

TABLE 3.11-4
Basin Sizing Summary

Treatment Volume	Basin Surface Area (Expressed as percentage of impervious area)
0.5" per impervious acre	2.5%
1.0" per impervious acre	5.0%

Runoff Pretreatment

Like other infiltration basins, bioretention basins must always be preceded by a pretreatment facility to remove grease, oil, floatable organic material, and settleable solids (see Urban Runoff section of **Sediment Control** under **Planning Considerations** above). Where space constraints allow, runoff should be filtered by a grass buffer strip and sand bed. The buffer strip and sand bed will reduce the amount of fine material entering the bioretention area and minimize the potential for clogging of the planting soil. The sand bed also increases the infiltration capacity and provides aeration for the plant roots in the bioretention area. For basins for which high sediment loadings are expected (treating

largely pervious areas, etc.), the design can be modified to include a sediment forebay (see **MS 3.04**). Any pretreatment facility should be included in the design of the basin and should include maintenance and inspection requirements.

Drainage Considerations

The grading design must shape the site so that all runoff from impervious areas is routed through the bioretention basins. The basins must be sited so as to accept the design runoff quantity before bypassing any excess flow to the storm drainage system. Bioretention basin locations must therefore be integrated into the basic site design from its inception. Most of the **Planning Considerations** delineated above must come into play at this early stage in the design process. The overall site and impervious surfaces must be contoured to direct the runoff to the basins. **Bioretention basins cannot usually be successfully integrated into a site design that does not take stormwater management into account from its inception.** Elevations must be carefully worked out to assure that the desired amount runoff will flow into the basins and pool at no more that the maximum design depth. This requires a much higher degree of vertical control during construction that is normal with most landscaping work.

Preferably, bioretention basins should be placed "off-line," i.e. the design should provide for runoff to be diverted into the basin until it fills with the treatment volume and then bypass the remaining flow around the BMP to the storm drainage system. The drainage system is normally designed to handle a specific storm event (the 10-year storm in most of Virginia). To prevent flood damage , however, the bioretention basin design must take into account how the runoff will be processed when larger events occur. This may require, at a minimum, that a vegetated emergency spillway be provided (see **MS-3.03**), and that a path for overland flow to an acceptable channel be incorporated into the design. The designer should provide for relief from the storm event specified by local development approval authority or for the 25-year storm event, whichever is the most stringent.

Figure 3.11-2 illustrates an "off-line" application at the edge of a parking lot with curb and gutter. The inlet deflectors divert runoff into the bioretention basin until the basin fills and backs up. Subsequent runoff then bypasses to the adjacent, down gradient storm inlet. **Figure 3.11-3** illustrates an "off-line" application in a planting island in a parking lot, while **Figure 3.11-4** illustrates an "off-line application adjacent to a drainage swale (such highway drainage). Again, runoff flows into the bioretention basin until it fills, then bypasses down the swale. Placement of a flow diversion check dam in the swale will facilitate filling the basin. In some situations, an "off-line" configuration may not be practical or economical. Figure **3.11-1** and **3.11-5** illustrate applications where sheet flow enters the bioretention basin.

Figure 3.11-7 illustrates a grading plan for a bioretention basin. The grading plan was created for a double-cell bioretention area. There is a seven-foot buffer between cells which allow for the planting of upland trees. As indicated in the grading plan, sheet and gutter flow is diverted into the bioretention areas through openings in the curb. The elevation of the invert of the bioretention area is set by the curb opening elevation. The curb opening elevation is 0.5 ft. higher than the invert of the bioretention area, so water is allowed to pond to a maximum depth of one-half foot before runoff bypasses the bioretention area and flows into the storm drain system.

Precise grading of the basin is critical to capturing the water quality volume and operation of the facility. The plan should have a contour interval of no more than one-foot, and spot elevations should be shown throughout the basin. The perimeter contour elevation should contain the design storm without over topping anywhere except at the outflow structure.

Exclusion of Continuous Flows and Chlorinated Flows

Bioretention and bioretention filter BMPs will **NOT** function properly if subjected to continuous or frequent flows. The basic principles upon which they operate assume that the sand filter will dry out and reaerate between storms. If the sand is kept continually wet by such flows as basement sump pumps, anaerobic conditions will develop, creating a situation under which previously captured iron phosphates degrade, leading to **export** of phosphates rather than the intended high phosphorous removal (Bell, Stokes, Gavan, and Nguyen, 1995). Anaerobic conditions will also kill most of the plants in the basin, stopping the biochemical pollutant removal processes and negating the aesthetic landscaping amenity aspects. It is also essential to **exclude flows containing chlorine and other swimming pool and sauna chemicals** since these will kill the bacteria upon which the principle nitrogen removal mechanisms depend.

Continuous or frequent flows (such as basement sump pump discharges, cooling water, condensate water, artesian wells, etc.) and flows containing swimming pool and sauna chemicals MUST BE EXCLUDED from routing through bioretention or bioretention filter BMPs since such flows will cause the BMP to MALFUNCTION!

Planting Plan

Selection of plantings must include coordination with overall site planning and aesthetic considerations for designing the bioretention plant community. Tables listing suitable species of trees, shrubs, and ground cover are provided at the end of this section. This listing is not intended to be all-inclusive due to the continual introduction of new horticultural varieties ans species in the nursery industry.

1. Planting Concept

The use of plantings in bioretention areas is modeled from the properties of a terrestrial forest community ecosystem. The terrestrial forest community ecosystem is an upland community dominated by trees, typically with a mature canopy, having a distinct sub-canopy of understory trees, a shrub layer, and herbaceous layer. In addition, the terrestrial forest ecosystem typically has a well-developed soil horizon with an organic layer and a mesic moisture regime. A terrestrial forest community model for stormwater management was selected based upon a forest's documented ability to cycle and assimilate nutrients, pollutants, and metals through the interactions among plants, soil, and the organic layer. These three elements are the major elements of the bioretention concept.

Key elements of the terrestrial forest ecosystem that have been incorporated into bioretention design include species diversity, density, and morphology, and use of native plant species. Species diversity protects the system against collapse from insect and disease infestations and other urban stresses such as temperature and exposure. Typically, indigenous plant species demonstrate a greater ability of adapting and tolerating physical, climatic, and biological stresses.

2. Plant Species Selection

Plant species appropriate for use in bioretention areas are presented in **Tables 3.11-7A** through **3.11-7C** , provided at the end of this section. These species have been selected based on the ability to tolerate urban stresses such as pollutants, variable soil moisture and ponding fluctuations. Important design considerations such as form, character, massing, texture, culture, growth habits/rates, maintenance requirements, hardiness, size, and type of root system are also included. A key factor in designating a species as suitable is its ability to tolerate the soil moisture regime and ponding fluctuations associated with bioretention. The plant indicator status (Reed, 1988) of listed species are predominantly facultative (i.e., they are adapted to stresses associated with both wet and dry conditions); however, facultative upland and wetland species have also been included. This is important because plants in bioretention areas will be exposed to varying levels of soil moisture and ponding throughout the year, ranging from high levels in the spring to potential drought conditions in the summer. All of the species listed in **Tables 3.11-7A - 3.11-7C** are commonly found growing in the Piedmont or Coastal Plain regions of Virginia as either native or ornamental species.

Recent research suggests an increase in the importance of the mulch layer and groundcover plant species in pollutant removal. The plant list in this standard will be expanded to include perennial flowering plants. A robust groundcover species with a thick mulch layer is recommended.

FIGURE 3.11 - 7
Grading Plan for Bioretention Basin

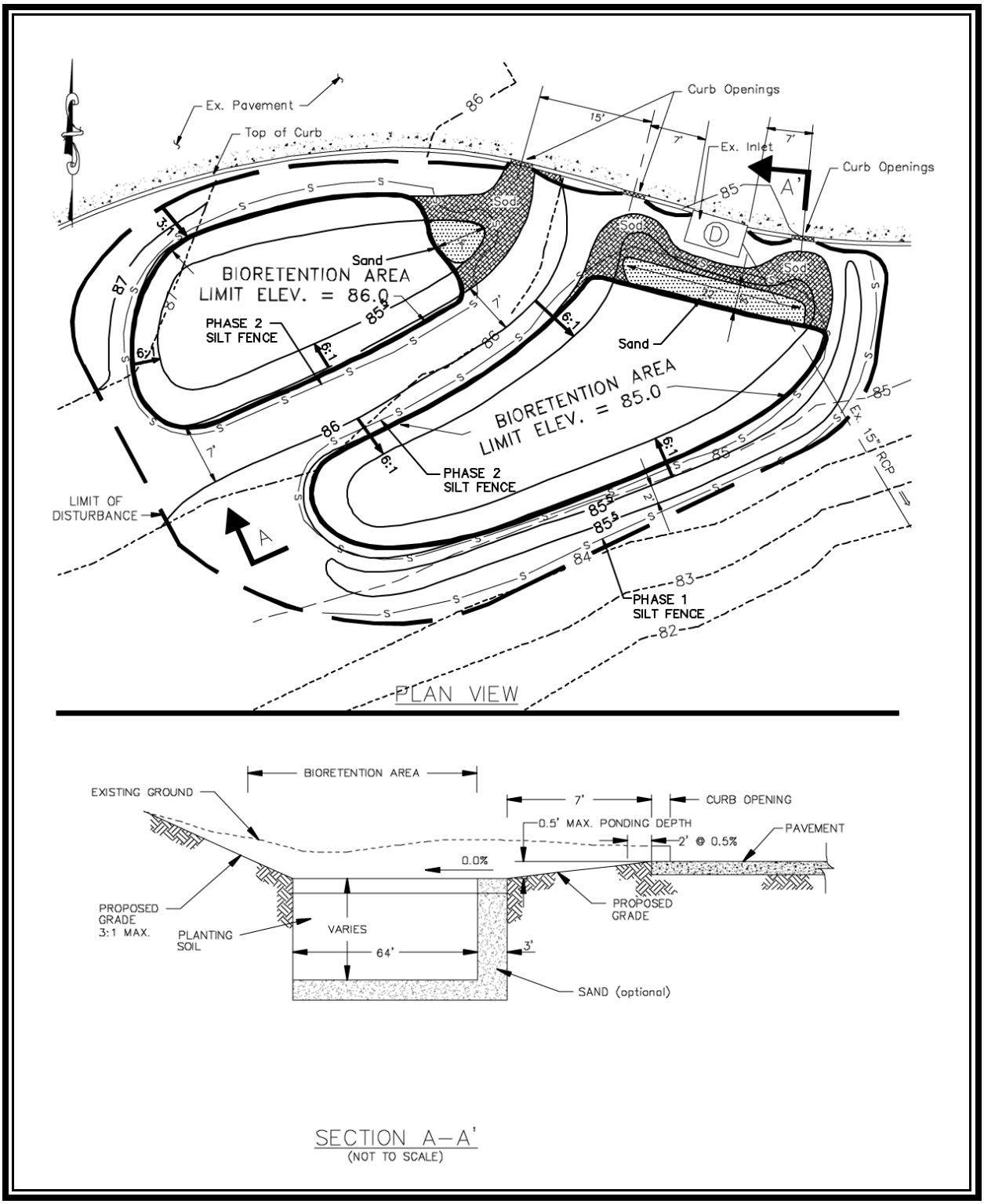

Designers considering species other than ones listed in **Tables 3.11-7A - 3.11-7C** should consult the following reference material on plant habitat requirements, and consider site conditions to ensure that alternative plant material will survive.

American Association of Nurserymen, Latest Edition. American Standard for Nursery Stock ASNI Z60, Washington, D.C.

Dirr, Michael A., 1975. Manual of Woody Landscape Plants, Stripes Publishing Company, Champagne, Illinois.

Hightshoe, G.L., 1988. Native Trees, Shrubs, and Vines for Urban and Rural America. Van Nostrand Reinhold, New York, New York.

Reed, P.B.Jr., 1988. National List of Species That Occur in Wetlands: Northeast. United States Fish and Wildlife Service, St. Petersburg Florida.

Reasons for exclusion of certain plants from bioretention areas include inability to meet the criteria outlined in **Tables 3.11-7A - 3.11-7C** (pollutant and metals tolerance, soil moisture and structure, ponding fluctuations, morphology, etc.). In addition, species that are considered invasive or not recommended by the Urban Design Section of the Maryland-National Capital Park and Planning Commission are not recommended (Prince George's County, 1989).

3. Site and Ecological Considerations

Each site is unique and may contain factors that should be considered before selecting plant species. An example **Plant Material Checklist** is provided in **Appendix 3E**. The checklist has been developed to assist the designer in identifying critical factors about a site that may affect both the plant material layout and the species selection.

Selection of plant species should also be based on site conditions and ecological factors. Site considerations include microclimate (light, temperature, wind), the importance of aesthetics, overall site development design and the extent of maintenance requirements, and proposed or existing buildings . Of particular concern is the increase in reflection of solar radiation from buildings upon bioretention areas. Aesthetics are critical in projects of high visibility. Species that require regular maintenance (shed fruit or are prone to storm damage) should be restricted to areas of limited visibility and pedestrian and vehicular traffic.

Interactions with adjacent plant communities are also critical. Nearby existing vegetated areas dominated by non-native invasive species pose a threat to adjacent bioretention areas. Proposed bioretention area species should be evaluated for compatibility with adjacent plant communities. Invasive species typically develop into monocultures by out competing other species . Mechanisms to avoid encroachment of undesirable species include increased maintenance, providing a soil breach between the invasive community for those species that spread through rhizomes, and providing annual removal of seedlings from wind borne seed dispersal. Existing disease or insect infestations associated with existing site conditions or in the general area that may effect the bioretention plantings.

4. Number of Species

A minimum of three species of trees and three species of shrubs should be selected to insure diversity. In addition to reducing the potential for monoculture mortality concerns, a diversity of trees and shrubs with differing rates of transpiration may ensure a more constant rate of evapotranspiration and nutrient and pollutant uptake throughout the growing season.

Herbaceous ground covers are important to prevent erosion of the mulch and the soil layers. Suitable herbaceous ground covers are identified in **Table 3.11-7C**.

5. Number and Size of Plants

The requisite number of plantings varies, and should be determined on an individual site basis. On average, 1000 trees and shrubs should be planted per acre. For example, a bioretention area measuring 15' x 40' would contain a combination of trees and shrubs totaling 14 individuals. The Prince Georges County recommended minimum and maximum number of individual plants and spacing are given in **Table 3.11-4.** Virginia jurisdictions with significant experience with bioretention prefer the simpler specification of 10 trees and shrubs per 1,000 square feet of basin area, with placement specified by a landscape professional to simulate natural conditions. Two to three shrubs should be specified for each tree (2:1 to 3:1 ratio of shrubs to trees).

At installation, trees should be 1.0 inches minimum in caliper, and shrubs 3 to 4 feet in height or 18 to 24 inches in spread per ASNI Z60. Ground cover may be as seed or, preferably, plugs. The relatively mature size requirements for trees and shrubs are important to ensure that the installation of plants are readily contributing to the bioretention process (i.e., evapotranspiration, pollutant uptake).

TABLE 3.11-5
Recommended Tree and Shrub Spacing

	Tree Spacing (feet)	Shrub Spacing (feet)	Total Density (stems/acre)
Maximum	19	12	400
Average	12	8	1000
Minimum	11	7	1250

6. Plant Layout

The layout of plant material can be a flexible process; however, the designer should follow some basic guidelines. As discussed above, the designer should first review the Plant Checklist (Appendix D). The checklist table can help expose any constraints that may limit the use of a particular species and/or where a species can be installed.

There are two guidelines that should apply to all bioretention areas. First, woody plant material should not be placed within the immediate areas of where flow will be entering the bioretention area.

Besides possibly concentrating flows, trees and shrubs can be damaged as a result of the flow. Secondly, it is recommended that trees be planted primarily on the perimeter of bioretention areas, to maximize the shading and sheltering of bioretention areas to create a microclimate which will limit the extreme exposure from summer solar radiation and winter freezes and winds. An example planting plan is shown in **Figure 3.11-8**.

FIGURE 3.11 - 8
Sample Planting Plan

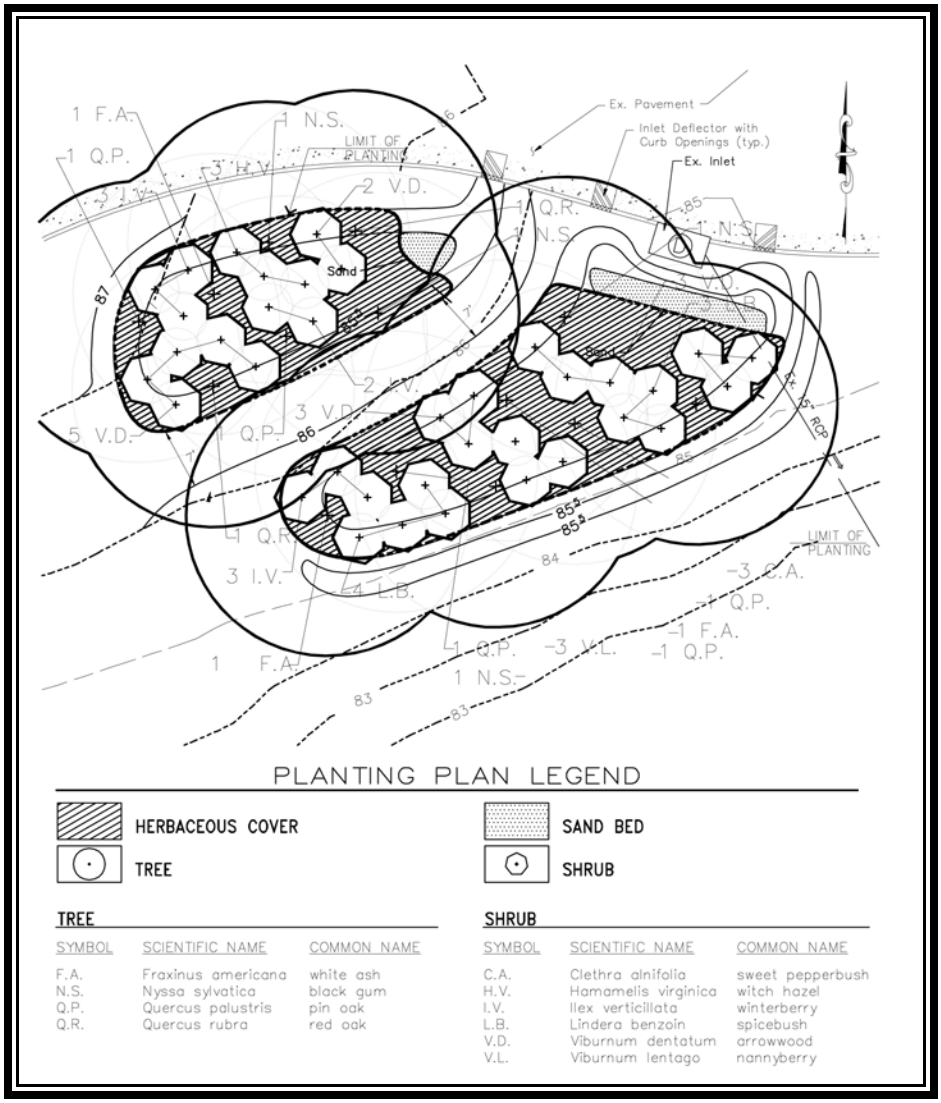

Planting Soil Guidelines

The characteristics of the soil play an important role in the improvement of water quality through the use of bioretention systems. The soil is a three-phase system composed of gas, liquid, and solid,

each of which in the proper balance is essential to the pollutant removal achieved through bioretention. The soil anchors the plants and provides nutrients and moisture for plant growth. Microorganisms inhabit and proliferate within the soil solution, and the unsaturated pore space provides plant roots with the oxygen necessary for metabolism and growth.

A desirable planting soil would 1) be permeable to allow infiltration of runoff and 2) provide adsorption of organic nitrogen and phosphorus.

The recommended planting soil for bioretention would have the following properties:

1. Soil Texture and Structure

It is recommended that the planting soils for bioretention have a sandy loam, loamy sand, or loam texture. Experience in both Maryland and Virginia has indicated that the original soil specification contained in the Prince Georges County manual must be modified to decrease the clay content to **no more than five percent** to preclude premature failure of the basins due to clogging. Prince Georges County issued a design update in June 1998 in which the total depth of the facility is reduced to 2.5 feet by the elimination of the sand bed and the use of a soil media consisting of 50 percent sand, 20 percent leaf compost, and 30 percent topsoil. Virginia engineers with bioretention experience recommend using either the new Maryland media specification or a media of 50 percent sand and 50 percent hemic or fibric peat, using the Virginia topsoil thickness criteria in both cases, while retaining the sand bed. This could result in an overall thickness somewhat comparable to that specified in Maryland.

2. Soil Acidity

In a bioretention scheme, the desired soil pH would lie between 5.5 and 6.5 (Tisdale and Nelson, 1975). The soil acidity affects the ability of the soil to adsorb and desorb nutrients, and also affects the microbiological activity in the soil.

3. Soil Testing

The planting soil for bioretention areas must be tested prior to installation for pH, organic matter, and other chemical constituents. The soil should meet the following criteria (Landscape Contractors Association, 4th Addition, 1993):

pH range:	5.0 - 7.0
Organic matter:	Greater than 1.5
Magnesium (Mg):	100+ Units
Phosphorus (P_2O_5):	150+ Units
Potassium (K_2O):	120+ Units
Soluble salts:	not to exceed 900 ppm/.9 MMHOS/cm (soil)
	not to exceed 3,000 ppm/2.5 MMHOS/cm (organic mix)

It is recommended that one test for magnesium, phosphorus, potassium, and soluble salts be performed per borrow source or for every 500 cubic yards of soil material. It is recommended that a sieve analysis, pH, and organic matter test be performed per bioretention area.

4. Soil Placement

Placement of the planting soil in the bioretention area should be in lifts of 18 inches or less and lightly compacted. Minimal compaction effort can be applied to the soil by tamping.

Specifications for the planting soil are outlined below under **Construction Specifications**.

Mulch Layer Guidelines

Recent results of bioretention monitoring in Maryland has confirmed that the mulch layer plays a crucial role in the pollutant removal capabilities of the facility. This layer serves to prevent erosion and to protect the soil from excessive drying. Soil biota existing within the organic and soil layer are important in the filtering of nutrients and pollutants and assisting in maintaining soil fertility. Bioretention areas can be designed either with or without a mulch layer. If a herbaceous layer or ground cover (70 to 80% coverage) is provided, a mulch layer is not necessary. Areas should be mulched once trees and shrubs have been planted. Any ground cover specified as plugs may be installed once mulch has been applied.

The mulch layer recommended for bioretention may consist of either a standard landscape fine shredded hardwood mulch or shredded hardwood chips. Both types of mulch are commercially available and provide excellent protection from erosion.

Mulch shall be free of weed seeds, soil, roots, or any other substance not consisting of either bole or branch wood and bark. The mulch shall be uniformly applied approximately 2 to 3 inches in depth. Mulch applied any deeper than three inches reduces proper oxygen and carbon dioxide cycling between the soil and the atmosphere.

Grass clippings are unsuitable for mulch, primarily due to the excessive quantities of nitrogen built up in the material. Adding large sources of nitrogen would limit the capability of bioretention areas to filter the nitrogen associated with runoff.

Plant Material Guidelines

1. Plant Material Source

The plant material should conform to the current issue of the American Standard for Nursery Stock published by the American Association of Nurserymen. Plant material should be selected from certified nurseries that have been inspected by state or federal agencies. The botanical (scientific) name of the plant species should be in accordance with a standard nomenclature source such as Birr, 1975.

Some of the plant species listed in **Tables 3.11-7A - 3.11-7C**, Recommended Plant Species For Use in Bioretention may be unavailable from standard nursery sources. These are typically species native to Virginia and may not be commonly used in standard practices. Designers may need to contact nurseries specializing in native plants propagation.

2. Installation

The success of bioretention areas is dependent on the proper installation specifications that are developed by the designer and subsequently followed by the contractor. The specifications include the procedures for installing the plants and the necessary steps taken before and after installation. Specifications designed for bioretention should include the following considerations:

- Sequence of Construction
- Contractors Responsibilities
- Planting Schedule and Specifications
- Maintenance
- Warranty

The sequence of construction describes site preparation activities such as grading, soil amendments, and any pre-planting structure installation. It also should address erosion and sediment control procedures. Erosion and sediment control practices should be in place until the entire bioretention area is completed. The contractors responsibilities should include all the specifications that directly effect the contractor in the performance of his or her work. The responsibilities include any penalties for unnecessarily delayed work, requests for changes to the design or contract, and exclusions from the contract specifications such as vandalism to the site, etc.

The planting schedule and specifications include type of material to be installed (e.g., ball and burlap, bare root, or containerized material), timing of installation, and post installation procedures. Balled and burlapped and containerized trees and shrubs should be planted during the following periods: March 15 through June 30 and September 15 through November 15. Ground cover excluding grasses and legumes can follow tree and shrub planting dates. Grasses and legumes typically should be planted in the spring of the year. The planting of trees and shrubs should be performed by following the planting specifications set forth in **MS 3.05, Landscaping. MS 3.05** specifications provide guidelines that insure the proper placement and installation of plant material. Designers may choose to use other specifications or to modify the jurisdiction specifications. However, any deviations from the jurisdiction specifications need to address the following:

- transport of plant material
- preparation of the planting pit
- installation of plant material
- stabilization seeding (if applicable)
- maintenance

An example of general planting specification for trees and shrubs and ground cover is given under **Construction Specifications** below.

3. Warranties

Typically, a warranty is established as a part of any plant installation project. The warranty covers all components of the installation that the contractor is responsible for. The plant and mulch installation for bioretention should be performed by a professional landscape contractor. An example of standard guidelines for landscape contract work is provided below:

- The contractor shall maintain a one (1) calendar year 80% care and replacement warranty for all planting.
- The period of care and replacement shall begin after inspection and approval of the complete installation of all plants and continue for one calendar year.
- Plant replacements shall be in accordance with the maintenance schedule.

Plant Growth and Soil Fertility

A discussion of plant growth and soil fertility development over time is important to for estimating the success and lifespan of bioretention areas. The physical, chemical, and biological factors influencing plant growth and development will vary over time as well as for each bioretention area. However, there are certain plant and soil processes that will be the same for all bioretention areas.

1. Plant Growth

The role of plants in bioretention includes uptake of nutrients and pollutants and evapotranspiration of stormwater runoff. The plant material, especially ground covers, are expected to contribute to the evapotranspiration process within the first year of planting. However, trees and shrubs that have been recently planted demonstrate slower rates of growth for the first season due to the initial shock of transplanting. The relative rate of growth is expected to increase to normal rates after the second growth season.

The growth rate for plants in bioretention areas will follow a similar pattern to that of other tree and shrub plantings (reforestation projects, landscaping). For the first two years, the majority of tree and shrub growth occurs with the expansion of the plant root system. By the third or fourth year the growth of the stem and branch system dominates increasing the height and width of the plant. The comparative rate of growth between the root and stem and branch system remains relatively the same throughout the lifespan of the plant. The reproductive system (flowers, fruit) of the plants is initiated last.

The growth rates and time for ground covers to become acclimated to bioretention conditions is much faster than for trees and shrubs. The rate of growth of a typical ground cover can often exceed 100 percent in the first year. Ground covers are considered essentially mature after the first year of growth. The longevity of ground covers will be influenced by the soil fertility and chemistry as well as physical factors, such as shading and overcrowding from trees and shrubs and other ecological and physical factors.

Plants are expected to increase their contribution to the bioretention concept over time, assuming that growing conditions are suitable. The rate of plant growth is directly proportional to the environment in which the plant is established. Plants grown in optimal environments experience greater rates of growth. One of the primary factors determining this is soil fertility.

2. Soil Fertility

Initially, soil in bioretention areas will lack a mature soil profile. It is expected that over time discrete soil zones referred to as horizons will develop. The development of a soil profile and the individual horizons is determined by the influence of the surrounding environment including physical, chemical, and biological processes. Two primary processes important to horizon development is microbial action and the percolation of runoff in the soil.

Horizons expected to develop in bioretention areas include an organic layer, followed by two horizons where active leaching (eluviation) and accumulation (illuvation) of minerals and other substances occur. The time frame for the development of soil horizons will vary greatly. As an average, soil horizons may develop within three to ten years. The exception to this is the formation of the organic layer often within the first or second year (Brady, 1984).

The evaluation of soil fertility in bioretention may be more dependent on the soil interactions relative to plant growth than horizon development. The soil specified for bioretention is important in filtering pollutants and nutrients as well as supply plants with water, nutrients, and support. Unlike plants that will become increasingly beneficial over time, the soil will begin to filter the storm water runoff immediately. It is expected that the ability to filter pollutants and nutrients may decrease over time, reducing the soil fertility accordingly. Substances from runoff such as salt and heavy metals eventually disrupt normal soil functions by lowering the cation exchange capacity (CEC). The CEC, the ability to allow for binding of particles by ion attraction, decreases to the point that the transfer of nutrients for plant uptake can not occur. However, the environmental factors influencing each bioretention area will vary enough that it is difficult to predict for the lifespan of soils. Findings from other stormwater management systems suggest an accumulation of substances eliminating soil fertility within five years. The monitoring of soil development in bioretention areas will help develop better predictions on soil fertility and development.

Construction Specifications

The construction of bioretention basins should be in accordance with the following Minimum Specifications and Standards where applicable: **3.1: Earthen Embankments; 3.2: Principal Spillways; 3.3: Vegetated Emergency Spillways; 3.4: Sediment Forebays; 3.5: Landscaping; 3.10: General Infiltration Practices**, as well as the additional criteria set forth below. These specifications have been adapted from the Prince George's County, Maryland publication, ***Design Manual for Use of Bioretention in Stormwater Management***.

Sequence of Construction

The sequence of various phases of basin construction must be coordinated with the overall project construction. As with other infiltration practices, rough excavation of the basin may be scheduled with the rough grading of the project to permit use of the excavated material as fill elsewhere on the site. However, the bioretention basin must not be constructed or placed in service until the entire contributing drainage area has been stabilized. Runoff from untreated, recently constructed areas within the drainage area may otherwise load the newly formed basin with a large load of fine sediment, seriously impairing the natural infiltration ability of the basin floor. For these reasons, **the locations of infiltration bioretention basins must NOT be used for sediment basins for erosion and sediment protection during site construction.** The sequence of construction shall be as follows:

1. Install Phase I erosion and sediment control measures for the site.

2. Grade each site to elevations shown on plan. Initially, the basin floor may be excavated to within one foot of its final elevation. Excavation to finished grade shall be deferred until all disturbed areas within the watershed have been stabilized and protected. Construct curb openings, and/or remove and replace existing concrete as specified on the plan. Curb openings shall be blocked or other measures taken to prohibit drainage from entering construction area.

3. Complete construction on the watershed and stabilize all areas draining to the Bioretention basin.

4. Remove Phase I sediment control devices at direction of designated inspector.

5. Install Phase II erosion and sediment control measures for bioretention area.

6. Remove all accumulated sediment and excavate Bioretention Area to proposed depth. Use relatively light, tracked equipment to avoid compaction of the basin floor. After final grading is completed, deeply till the basin floor with rotary tillers or disc harrows to provide a well-aerated, highly porous surface texture.

7. Install the infiltration chambers, piping, manifolds, drains, vents, and infiltration stone in accordance in with the specifications and directions of the chamber manufacturer. Install a six-inch layer of washed, 1/4-inch pea gravel above the stone. Install a 1-foot layer of ASTM C-33 concrete sand on top of the pea gravel. Lightly compact with a landscaping roller.

8. After confirmation that soil meets specs by performing the requisite gradation and chemical tests (see below), fill Bioretention Area with planting soil and sand, as shown in the plans and detailed in the specifications.

9. Install vegetation and ground cover specified in the planting plan for Bioretention Area.

Install mulch layer if called for in the design.

10. Place sod, EC fabric, or non erosive lining (depending on inflow velocities) in the inlet channel and/or filter strips.

11. Upon authorization from designated inspector, remove all sediment controls and stabilize all disturbed areas. Unblock curb openings, and provide drainage to the Bioretention Areas.

Bioretention Area Soil Specifications

1. Planting Soil

The bioretention areas shall contain a planting soil mixture of 50% sand, 30% leaf compost (fully composted, NOT partially rotted leaves), and 20% topsoil. Topsoil shall be sandy loam or loamy sand of uniform composition, containing no more than 5% clay, free of stones, stumps, roots, or similar objects greater than one inch, brush, or any other material or substance which may be harmful to plant growth, or a hindrance to plant growth or maintenance.

The top soil shall be free of plants or plant parts of Bermuda grass, Quack grass, Johnson grass, Mugwort, Nutsedge, Poison Ivy, Canadian Thistle or others as specified. It shall not contain toxic substances harmful to plant growth.

The top soil shall be tested and meet the following criteria:

pH range:	5.0 - 7.0
Organic matter:	Greater than 1.5
Magnesium (Mg):	100+ Units
Phosphorus (P_2O_5):	150+ Units
Potassium (K_2O):	120+ Units
Soluble salts:	not to exceed 900 ppm/.9 MMHOS/cm (soil) not to exceed 3,000 ppm/2.5 MMHOS/cm (organic mix)

The following testing frequencies shall apply to the above soil constituents:

pH, Organic Matter: 1 test per 90 cubic yards, but no more than 1 test per Bioretention Area

Magnesium, Phosphorus, Potassium, Soluble Salts:

1 test per 500 cubic yards, but no less than 1 test per borrow source

One grain size analysis shall per performed per 90 cubic yards of planting soil, but no less than 1 test per Bioretention Area. Soil tests must be verified by a qualified professional.

2. Mulch

A mulch layer shall be provided on top of the planting soil. An acceptable mulch layer shall include shredded hardwood or shredded wood chips or other similar product.

Of the approved mulch products all must be well aged, uniform in color, and free of foreign material including plant material.

3. Sand

The sand for bioretention basins when utilized, shall be ASTM C-33 Concrete Sand and free of deleterious material.

4. Compaction

Soil shall be placed in lifts less than 18 inches and lightly compacted (minimal compactive effort) by tamping or rolled with a hand-operated landscape roller.

Bioretention Area Planting Specifications

1. Root stock of the plant material shall be kept moist during transport from the source to the job site and until planted.

2. Walls of planting pit shall be dug so that they are vertical.

3. The diameter of the planting pit must be a minimum of six inches (6") larger than the diameter of the ball of the tree.

4. The planting pit shall be deep enough to allow 1/8 of the overall dimension of the root ball to be above grade. Loose soil at the bottom of the pit shall be tamped by hand.

5. The appropriate amount of fertilizer is to be placed at the bottom of the pit (see below for fertilization rates).

6. The plant shall be removed from the container and placed in the planting pit by lifting and carrying the plant by its' ball (never lift by branches or trunk).

7. Set the plant straight and in the center of the pit so that approximately 1/8 of the diameter of the root ball is above the final grade.

8. Backfill planting pit with existing soil.

9. Make sure plant remains straight during backfilling procedure.

10. Never cover the top of the ball with soil. Mound soil around the exposed ball.

11. Trees shall be braced by using 2" by 2" white oak stakes. Stakes shall be placed parallel to walkways and buildings. Stakes are to be equally spaced on the outside of the tree ball. Utilizing hose and wire the tree is braced to the stakes.

12. Because of the high levels of nutrients in stormwater runoff to be treated, bioretention basin plants should not require chemical fertilization.

Maintenance/Inspection Guidelines

The following maintenance and inspection guidelines are not intended to be all inclusive. Specific Facilities may require additional measures not discussed here.

A schedule of recommended maintenance for bioretention areas is given in **Table 3.11-5**. The table gives general guidance regarding methods, frequency, and time of year for maintenance.

Planting Soil

Urban plant communities tend to become very acidic due to precipitation as well as the influences of storm water runoff. For this reason, it is recommended that the application of alkaline, such as limestone, be considered once to twice a year. Testing of the pH of the organic layer and soil, should precede the limestone application to determine the amount of limestone required.

Soil testing should be conducted annually so that the accumulation of toxins and heavy metals can be detected or prevented. Over a period of time, heavy metals and other toxic substances will tend to accumulate in the soil and the plants. Data from other environs such as forest buffers and grass swales suggest accumulation of toxins and heavy metals within five years of installation. However, there is no methodology to estimate the level of toxic materials in the bioretention areas since runoff, soil, and plant characteristics will vary from site to site.

As the toxic substances accumulate, the plant biologic functions may become impaired, and the plant may experience dwarfed growth followed by mortality. The biota within the soil can also become void and the natural soil chemistry may be altered. The preventative measures would include the removal of the contaminated soil. In some cases, removal and disposal of the entire soil base as well as the plant material may be required.

Mulch

Bioretention areas should be mulched once the planting of trees and shrubs has occurred. Any ground cover specified as plugs may be installed once the area has been mulched. Ground cover established by seeding and\or consisting of grass should not be covered with mulch.

Plant Materials

An important aspect of landscape architecture is to design areas that require little maintenance. Certain plant species involve maintenance problems due to dropping of fruit or other portions of the plant. Another problem includes plants, primarily trees, that are susceptible to windthrow, which creates a potential hazard to people and property (parked cars). As a result, some plant species will be limited to use in low-traffic areas.

Ongoing monitoring and maintenance is vital to the overall success of bioretention areas. Annual maintenance will be required for plant material, mulch layer, and soil layer. A maintenance schedule should include all of the main considerations discussed below. The maintenance schedule usually includes maintenance as part of the construction phase of the project and for life of the design. A example maintenance schedule is shown in **Table 3.11-6**.

Maintenance requirements will vary depending on the importance of aesthetics. Soil and mulch layer maintenance will be most likely limited to correcting areas of erosion. Replacement of mulch layers may be necessary every two to three years. Mulch should be replaced in the spring. When the mulch layer is replaced, the previous layer should be removed first. Plant material upkeep will include addressing problems associated with disease or insect infestations, replacing dead plant material, and any necessary pruning.

Control of Sediments on the Drainage Shed

Care must be taken to protect the bioretention basin from excessive sediments from the drainage shed. Whenever additional land disturbing activity takes place in the area draining to the basin, effective erosion and sediment control measures must first be put in place to exclude sediments from the basin. Performance based special measures over and above those specified in the ***Virginia Erosion and Sediment Control Handbook***, latest edition, may be required to assure that the bioretention basin is not damaged by such land disturbance. When sand or other street abrasives are used during the snow or icing conditions to provide traction on roadways or parking lots draining to bioretention basins, the pavement should be power/vacuum swept as soon as freezing weather abates to prevent damage to the basins.

Checklists

The Construction Inspection and As-Built Checklist provided in **Appendix 3E** is for use in inspecting bioretention basins during construction, and where required by local jurisdiction, engineering certification of the basin construction. The Operation and Maintenance Inspection Checklist, also found in **Appendix 3E**, is for use in conducting maintenance inspections of bioretention basins.

TABLE 3.11 - 6
Example Maintenance Schedule for Bioretention Basin

Description	Method	Frequency	Time of the year
SOIL			
Inspect and Repair Erosion	Visual	Monthly	Monthly
ORGANIC LAYER			
Remulch any void areas	By hand	Whenever needed	Whenever needed
Remove previous mulch layer before applying new layer (optional)	By hand	Once every two to three years	Spring
Any additional mulch added (optional)	By hand	Once a year	Spring
PLANTS			
Removal and replacement of all dead and diseased vegetation considered beyond treatment	See planting specifications	Twice a year	3/15 to 4/30 and 10/1 to 11/30
Treat all diseased trees and shrubs	Mechanical or by hand	N/A	Varies, depends on insect or disease infestation
Watering of plant material shall take place at the end of each day for fourteen consecutive days after planting has been completed	By hand	Immediately after completion of project	N/A
Replace stakes after one year	By hand	Once a year	Only remove stakes In the spring
Replace any deficient stakes or wires	By hand	N/A	Whenever needed
Check for accumulated sediments	Visual	Monthly	Monthly

TABLE 3.11-7A RECOMMENDED PLANT SPECIES FOR USE IN BIORETENTION --- TREE SPECIES

Species	Moisture Regime		Tolerance						Morphology			General Characteristics			Comments
Scientific Name Common Name	Indicator Status	Habitat	Ponding (days)	Salt	Oil/ Grease	Metals	Insects Disease	Exposure	Form	Height	Root System	Native	Non-native	Wildlife	
Acer rubrum red maple	FAC	Mesic - Hydric	4-6	H	H	H	H	Partial Sun	Single to multi-stem tree	50-70'	Shallow	Yes	-	High	-
Amelanchier canadensis shadbush	FAC	Mesic	2-4	H	M	-	H	Partial Sun	Single to multi-stem tree	35-50'	Shallow	Yes	-	High	Not recommended for full sun.
Betula nigra river birch	FACW	Mesic - Hydric	4-6	-	M	M	H	Partial Sun	Single to multi-stem tree	50-75'	Shallow	Yes	-	High	Not susceptible to bronze birch borer.
Betula populifolia gray birch	FAC	Xeric - Hydric	4-6	H	H	M	H	Partial Sun	Single to multi-stem tree	35-50'	Shallow to deep	-	Yes	High	Native to New England area.
Fraxinus americana white ash	FAC	Mesic	2-4	M	H	H	H	Sun	Large tree	50-80'	Deep	Yes	-	Low	-
Fraxinus pennsylvanica green ash	FACW	Mesic	4-6	M	H	H	H	Partial Sun	Large tree	40-65'	Shallow to deep	Yes	-	Low	-
Ginkgo biloba Maidenhair tree	FAC	Mesic	2-4	H	H	H	H	Sun	Large tree	50-80'	Shallow to deep	-	Yes	Low	Avoid female species- offensive odor from fruit.
Gleditsia triacanthos honeylocust	FAC	Mesic	2-4	H	M	-	M	Sun	Small canopied large tree	50-75'	Shallow to deep variable taproot	Yes	-	Low	Select thornless variety.
Juniperus virginiana eastern red cedar	FACU	Mesic - Xeric	2-4	H	H	-	H	Sun	Dense single stem tree	50-75'	Taproot	Yes	-	Very High	Evergreen
Koelreuteria paniculata golden-rain tree	FACU	Mesic	2-4	H	H	H	H	Sun	Round, dense shade tree	20-30'	Shallow	-	Yes	No	-
Liquidambar styraciflua sweet gum	FAC	Mesic	4-6	H	H	H	M	Sun	Large tree	50-70'	Deep taproot	Yes	-	High	Edge and perimeter; fruit is a maintenance problem.
Nyssa sylvatica black gum	FACW	Mesic - Hydric	4-6	H	H	H	H	Sun	Large tree	40-70'	Shallow to deep taproot	Yes	-	High	-

H High Tolerance
M Medium Tolerance
L Low Tolerance

FAC Facultative - Equally likely to occur in wetlands or non-wetlands.
FACU Facultative Upland - Usually occur in non-wetlands, but occasionally found in wetlands.
FACW Facultative Wetland - Usually occur in wetlands, but occasionally found in non-wetlands.

NOTE: Heights shown in table are under ideal conditions in rural settings. They do not reflect urban conditions, under which plants do not commonly survive to such maturity.

TABLE 3.11-7A RECOMMENDED PLANT SPECIES FOR USE IN BIORETENTION --- TREE SPECIES

Species	Moisture Regime		Tolerance						Morphology			General Characteristics			Comments
Scientific Name Common Name	Indicator Status	Habitat	Ponding (days)	Salt	Oil/ Grease	Metals	Insects Disease	Exposure	Form	Height	Root System	Native	Non-native	Wildlife	
Platanus acerifolia London plane-tree	FACW	Mesic	2-4	H	-	-	M	Sun	Large tree	70-80'	Shallow	-	Yes	Low	Tree roots can heave sidewalks.
Platanus occidentalis sycamore	FACW	Mesic - Hydric	4-6	M	M	M	M	Sun	Large tree	70-80'	Shallow	Yes	-	Med.	Edge and perimeter; fruit is a maintenance problem; tree is also prone to windthrow.
Populus deltoides eastern cottonwood	FAC	Xeric - Mesic	4-6	H	H	H	L	Sun	Large tree with spreading branches	75-100'	Shallow	Yes	-	High	Short lived.
Quercus bicolor swamp white oak	FACW	Mesic to wet Mesic	4-6	H	-	H	H	Sun to partial sun	Large tree	75-100'	Shallow	Yes	-	High	One of the faster growing oaks.
Quercus coccinea scarlet oak	FAC	Mesic	1-2	H	M	M	M	Sun	Large tree	50-75'	Shallow to deep	Yes	-	High	-
Quercus macrocarpa bur oak	FAC	Mesic to wet Mesic	2-4	H	H	H	M	Sun	Large spreading tree	75-100'	Taproot	-	Yes	High	Native to midwest.
Quercus palustris pin oak	FACW	Mesic - Hydric	4-6	H	H	H	M	Sun	Large tree	60-80'	Shallow to deep taproot	Yes	-	High	-
Quercus phellos willow oak	FACW	Mesic to wet Mesic	4-6	H	-	-	H	Sun	Large tree	55-75'	Shallow	Yes	-	High	Fast growing oak.
Quercus rubra red oak	FAC	Mesic	2-4	M	H	M	M	Sun to partial sun	Large spreading tree	60-80'	Deep taproot	Yes	-	High	-

H High Tolerance
M Medium Tolerance
L Low Tolerance

FAC Facultative - Equally likely to occur in wetlands or non-wetlands.
FACU Facultative Upland - Usually occur in non-wetlands, but occasionally found in wetlands.
FACW Facultative Wetland - Usually occur in wetlands, but occasionally found in non-wetlands.

NOTE: Heights shown in table are under ideal conditions in rural settings. They do not reflect urban conditions, under which plants do not commonly survive to such maturity.

TABLE 3.11-7A RECOMMENDED PLANT SPECIES FOR USE IN BIORETENTION --- TREE SPECIES

Species	Moisture Regime		Tolerance						Morphology			General Characteristics			Comments
Scientific Name Common Name	Indicator Status	Habitat	Ponding (days)	Salt	Oil/ Grease	Metals	Insects Disease	Exposure	Form	Height	Root System	Native	Non-native	Wildlife	
Robinia pseudo-acacia black locust	FAC	Mesic - Xeric	2-4	H	H	H	M	Sun	Typically tall and slender	30-50'	Shallow	Yes	-	Low	Edge and perimeter; fruit is a maintenance problem; tree is also prone to windthrow.
Sophora japonica Japanese pagoda tree	FAC	Mesic	1-2	M	M	-	M	Sun	Shade tree	40-70'	Shallow	-	Yes	Low	Fruit stains sidewalks etc.
Taxodium distichum bald cypress	FACW	Mesic - Hydric	4-6	-	-	M	H	Sun to partial sun	Typically single stem tree	75-100'	Shallow	Yes	-	Low	Not well documented for planting in urban areas.
Zelkova serrata Japanese zelkova	FACU	Mesic	1-2	M	M	-	H	Sun	Dense shade tree	60-70'	Shallow	-	Yes	Low	Branches can split easily in storms.

H High Tolerance
M Medium Tolerance
L Low Tolerance

FAC Facultative - Equally likely to occur in wetlands or non-wetlands.
FACU Facultative Upland - Usually occur in non-wetlands, but occasionally found in wetlands.
FACW Facultative Wetland - Usually occur in wetlands, but occasionally found in non-wetlands.

NOTE: Heights shown in table are under ideal conditions in rural settings. They do not reflect urban conditions, under which plants do not commonly survive to such maturity.

TABLE 3.11-7B RECOMMENDED PLANT SPECIES FOR USE IN BIORETENTION --- SHRUB SPECIES

Species	Moisture Regime		Tolerance						Morphology			General Characteristics			Comments
Scientific Name Common Name	Indicator Status	Habitat	Ponding (days)	Salt	Oil/ Grease	Metals	Insects Disease	Exposure	Form	Height	Root System	Native	Non-native	Wildlife	
Berberis koreana barberry	FAC	Mesic	2-4	H	H	H	M	Sun to partial sun	Oval shrub	4-6'	Shallow	-	Yes	Low	-
Berberis thunbergii Japanese barberry	FAC	Mesic	2-4	H	H	H	M	Sun	Rounded, broad dense shrub	5-7'	Shallow	-	Yes	Med.	-
Clethra alnifolia sweet pepperbush	FAC	Mesic to wet Mesic	2-4	H	-	-	H	Sun to partial sun	Ovoid shrub	6-12'	Shallow	Yes	-	Med.	Coastal plain species
Cornus Stolonifera red osier dogwood	FACW	Mesic - Hydric	2-4	H	H	H	M	Sun or shade	Arching, spreading shrub	8-10'	Shallow	Yes	-	High	Needs more consistant moisture levels.
Euonymus alatus winged euonymous	FAC	Mesic	1-2	H	H	H	M	Sun or shade	Flat, dense horizontal branching shrub	5-7'	Shallow	-	Yes	No	-
Euonymus europaeus spindle-tree	FAC	Mesic	1-2	M	M	M	M	Sun to partial sun	Upright dense oval shrub	10-12'	Shallow	-	Yes	No	-
Hamamelis virginiana witch-hazel	FAC	Mesic	2-4	M	M	M	M	Sun or shade	Vase-like compact shrub	4-6'	Shallow	Yes	-	Low	-
Hypericum densiflorum common St. John's wort	FAC	Mesic	2-4	H	M	M	H	Sun	Ovoid shrub	3-6'	Shallow	Yes	-	Med.	-
Ilex glabra inkberry	FACW	Mesic to wet Mesic	2-4	H	H	-	H	Sun to partial sun	Upright dense shrub	6-12'	Shallow	Yes	-	High	Coastal plain species
Ilex verticillata winterberry	FACW	Mesic to wet Mesic	2-4	L	M	-	H	Sun to partial sun	Spreading shrub	6-12'	Shallow	Yes	-	High	-
Juniperus communis "compressa" common juniper	FAC	Dry Mesic - Mesic	1-2	M	H	H	M - H	Sun	Mounded shrub	3-6'	Deep taproot	-	Yes	High	Evergreen

H High Tolerance
M Medium Tolerance
L Low Tolerance

FAC Facultative - Equally likely to occur in wetlands or non-wetlands.
FACU Facultative Upland - Usually occur in non-wetlands, but occasionally found in wetlands.
FACW Facultative Wetland - Usually occur in wetlands, but occasionally found in non-wetlands.

TABLE 3.11-7B RECOMMENDED PLANT SPECIES FOR USE IN BIORETENTION --- SHRUB SPECIES

Species	Moisture Regime		Tolerance						Morphology			General Characteristics			Comments
Scientific Name Common Name	Indicator Status	Habitat	Ponding (days)	Salt	Oil/ Grease	Metals	Insects Disease	Exposure	Form	Height	Root System	Native	Non-native	Wildlife	
Juniperus horizontalis "Bar Harbor" creeping juniper	FAC	Dry Mesic - Mesic	1-2	M	H	H	M - H	Sun	Matted shrub	0-3'	Deep taproot	-	Yes	High	Evergreen
Lindera benzoin spicebush	FACW	Mesic to wet Mesic	2-4	H	-	-	H	Sun	Upright shrub	6-12'	Deep	Yes	-	High	-
Myrica pennsylvanica bayberry	FAC	Mesic	2-4	H	M	M	H	Sun to partial sun	Rounded, compacted shrub	6-8'	Shallow	Yes	-	High	Coastal plain species
Physocarpus opulifolius ninebark	FAC	Dry Mesic to wet Mesic	2-4	M	-	-	H	Sun	Upright shrub	6-12'	Shallow	Yes	-	Med.	May be difficult to locate.
Viburnum cassinoides northern wild raisin	FACW	Mesic	2-4	H	H	H	H	Sun to partial sun	Rounded, compacted shrub	6-8'	Shallow	Yes	-	High	-
Viburnum dentatum arrow-wood	FAC	Mesic	2-4	H	H	H	H	Sun to partial sun	Upright, multi-stemmed shrub	8-10'	Shallow	Yes	-	High	-
Viburnum lentago nannyberry	FAC	Mesic	2-4	H	H	H	H	Sun to partial sun	Upright, multi-stemmed shrub	8-10'	Shallow	Yes	-	High	-

H High Tolerance
M Medium Tolerance
L Low Tolerance

FAC Facultative - Equally likely to occur in wetlands or non-wetlands.
FACU Facultative Upland - Usually occur in non-wetlands, but occasionally found in wetlands.
FACW Facultative Wetland - Usually occur in wetlands, but occasionally found in non-wetlands.

TABLE 3.11-7C RECOMMENDED PLANT SPECIES FOR USE IN BIORETENTION --- HERBACEOUS SPECIES

Species	Moisture Regime		Tolerance						Morphology			General Characteristics			Comments
Scientific Name Common Name	Indicator Status	Habitat	Ponding (days)	Salt	Oil/ Grease	Metals	Insects Disease	Exposure	Form	Height	Root System	Native	Non-native	Wildlife	
Agrostis alba redtop	FAC	Mesic - Xeric	1-2	H	-	H	H	Shade	Grass	2-3'	Fiberous Shallow	Yes	-	High	-
Andropogon gerardi bluejoint	FAC	Dry Mesic - Mesic	1-2	-	-	-	-	Sun	Grass	2-3'	Fiberous Shallow	Yes	-	High	-
Deschampsia caespitosa tufted hairgrass	FACW	Mesic to wet Mesic	2-4	H	-	H	H	Sun	Grass	2-3'	Fiberous Shallow	Yes	-	High	May become invasive.
Hedera helix English ivy	FACU	Mesic	1-2	-	-	-	H	Sun	Evergreen ground cover	-	Fiberous Shallow	-	Yes	Low	-
Lotus Corniculatus birdsfoot-trefoil	FAC	Mesic - Xeric	1-2	H	L	H	H	Sun	Grass	2-3'	Fiberous Shallow	Yes	-	High	Member of the legume family.
Pachysandra terminalis Japanese pachysandra	FACU	Mesic	1-2	-	-	-	M	Shade	Evergreen ground cover	-	Fiberous Shallow	-	Yes	Low	-
Panicum virgatum switch grass	FAC to FACU	Mesic	2-4	H	-	-	H	Sun or Shade	Grass	4-5'	Fiberous Shallow	Yes	-	High	Can spread fast and reach height of 6'.
Parthenocissus Tricuspida Boston ivy	FACU	Mesic	1-2	-	-	-	H	Shade	Evergreen ground cover		Fiberous Shallow	-	Yes	Low	May need to be trimmed back often.
Vinca major large periwinkle	FACU	Mesic	1-2	-	-	-	H	Shade	Evergreen ground cover	-	Fiberous Shallow	-	Yes	Low	Sensitive to soil compaction and pH changes.

H High Tolerance
M Medium Tolerance
L Low Tolerance

FAC Facultative - Equally likely to occur in wetlands or non-wetlands.
FACU Facultative Upland - Usually occur in non-wetlands, but occasionally found in wetlands.
FACW Facultative Wetland - Usually occur in wetlands, but occasionally found in non-wetlands.

MINIMUM STANDARD 3.11A

BIORETENTION FILTERS

Definition

Bioretention basins that rely on infiltration (**MINIMUM STANDARD 3.11: BIORETENTION BASINS**) may not be feasible in many ultra-urban settings because of the proximity of building foundations or because soils are not conducive to exfiltration from the basin. **Bioretention Filters** were developed for use in such circumstances.

Bioretention soil media filters are essentially bioretention basins with the infiltration chamber gallery equipped with a permanent and continuous connection to the storm sewer system. The bioretention basin shown in **Figure 3.11A-1** illustrates a bioretention basin equipped to function as a filter.

When used in areas underlain by marine clays or in proximity to building foundations, the entire basin must be provided with a dense clay or geomembrane liner. When the filter concept must be used simply because of low percolation rates of the soil, the liner may be omitted. The vertical sand column is also optional on a bioretention filter.

Purpose

Water Quality Enhancement

Like bioretention basins, bioretention filters are used primarily for water quality control. Bioretention filters enhance the quality of stormwater runoff through the processes of adsorption, filtration, volitization, ion exchange, microbial and decomposition prior to collection of the treated effluent in the collector pipe system. Microbial soil processes, evapotranspiration, and nutrient uptake in plants also come into play (Bitter and Bowers, 1995). The manner in which these processes work is discussed under **MINIMUM STANDARD 3.11, BIORETENTION BASINS**. The minimum widths and lengths for bioretention basins (10' and 15', respectively) also apply to bioretention filters. However, since runoff will be treated faster in a bioretention filter, it may be pooled to a maximum depth of 1 foot above the basin floor rather than the 0.5 feet allowed in a bioretention basin. **Table 3.11A-1** contains the target removal efficiencies for bioretention filters in which a **mature** forest community has been created, based on the volume of runoff to be filtered.

FIGURE 3.11A-1
Bioretention Filter

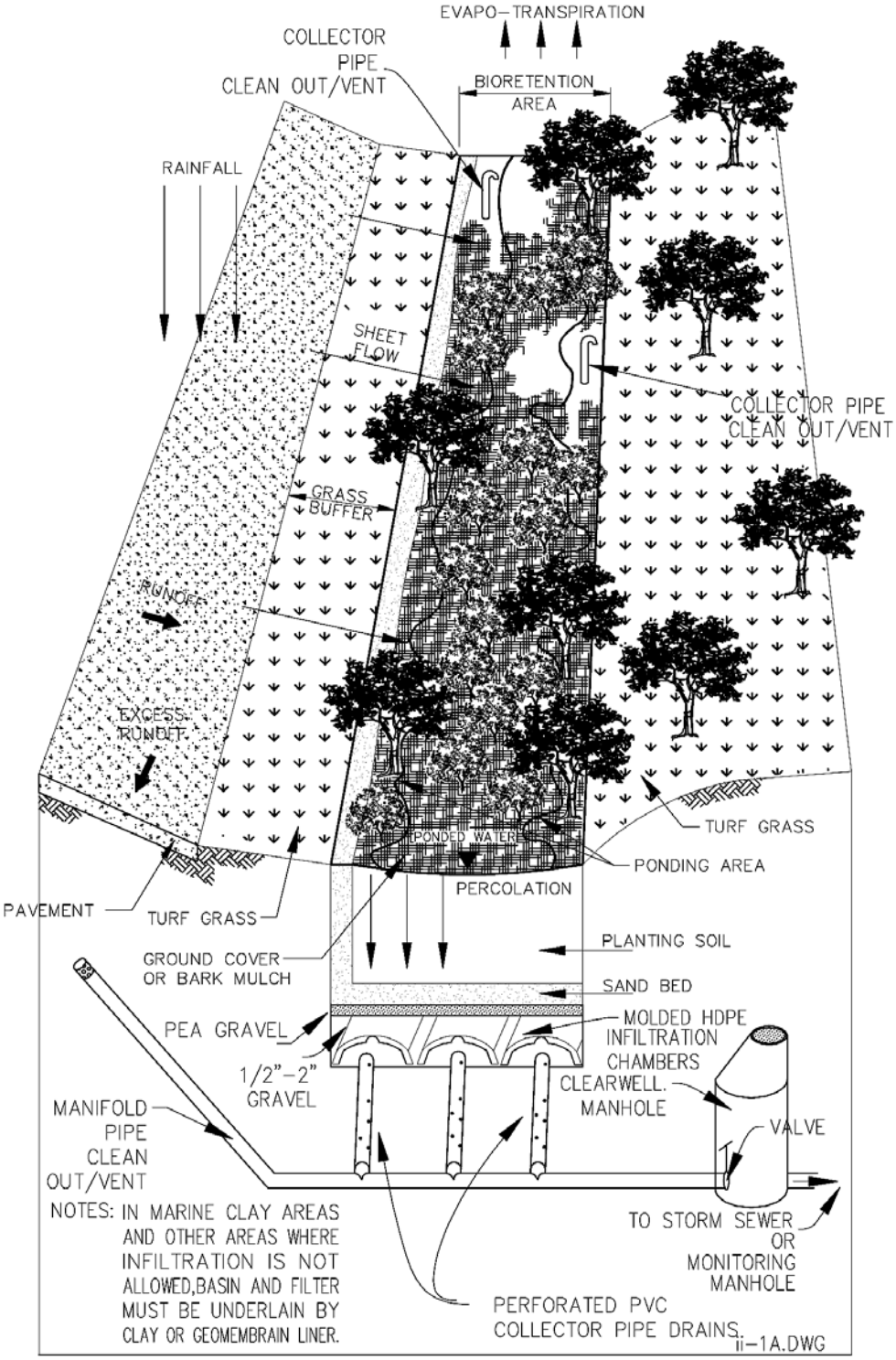

TABLE 3.11A - 1
Pollutant Removal Efficiencies for Bioretention Filters

BMP Description	Target Pollutant Removal Efficiency (Phosphorous)
Bioretention filter with capture and treatment volume equal to 0.5 inches of runoff from the impervious area.	50%
Bioretention filter with capture and treatment volume equal to 1.0 inches of runoff from the impervious area.	65%

Flood Control and Channel Erosion Control

The amount of flood and channel erosion control protection provided by bioretention basins depends on the local rainfall frequency spectrum, the amount of pre-development (or pre-redevelopment) impervious cover, the amount of post-development impervious cover, and the volume of runoff captured and infiltered by the basin(s). The effect of the BMPs on peak flow rates from the drainage shed must be examined As with other infiltration practices, bioretention basins tend to reverse the consequences of urban development by reducing peak flow rates and providing groundwater discharge.

Conditions Where Practice Applies

Bioretention Filters are generally suited for almost all types of development, from single-family residential to fairly high density commercial projects. They are attractive for higher density projects because of their relatively high removal efficiency. The critical prerequisite is the existence of a deep enough storm sewer to accept drainage from the collector pipe system by gravity flow. All of the applications shown in **Figures 3.11-2** through **3.11-6** under **MS 3.11** may be built as bioretention filters. As with bioretention basins, for large applications, several connected bioretention filters (another type of "Green Alleys") are preferable to a single, massive filter. Such systems are especially desirable along the landward boundary of reduced Chesapeake Bay Resource Protection Areas. **MS 3.11B** discusses this system. Considering the character of bioretention basins, some jurisdictions may qualify them as buffer restoration.

Planning Considerations

Site Conditions

Except for those dealing with proper soils to accept infiltration and sizing of the filters, all of the **Site Conditions** considerations for bioretention basins contained in **MINIMUM STANDARD 3.11: BIORETENTION BASINS** also apply to bioretention filters. The same drainage area range applies, as do the same **Location Considerations.** In addition to site conditions, the following apply specifically to bioretention filters.

1. Sizing Guidelines

For planning purposes, assume that the floor area of a bioretention filter will be 2.5% of the impervious area draining to the filter if 0.5 inches of runoff are to be treated and 5.0% of the impervious area on the drainage shed if the first 1.0 inches of runoff are to be treated.

2. Aesthetic Considerations

All of the discussion of aesthetics under **MINIMUM STANDARD 3.11: BIORETENTION BASINS** apply equally to bioretention filters. Overall aesthetics of the bioretention filters must be integrated into the site plan and stormwater concept plan from their inception. Biomorphic shapes which follow the ground contours should be used rather than angular shapes. The bioretention filter should be essentially almost invisible upon completion, blending in with the other landscaping of the site. Both the stormwater engineer and the landscaping planner must participate in the layout of the facilities and infrastructure to be placed on the site.

Sediment Control

All of the **Sediment Control** considerations for bioretention basins under **MS 3.11: Bioretention Basins** also apply to bioretention filters.

Like bioretention basins, bioretention filters should be constructed only AFTER the site work is complete and stabilization measures have been implemented. Experience with bioretention basins and soil media filters has demonstrated that bioretention filters must be protected from all sediment loads.

Bioretention filters must retain sediment control protection until stabilization of the upland site is functional to control the sediment load from denuded areas. Provisions to bypass the stormwater away from the bioretention filter during the stabilization period must be implemented.

General Design Criteria

The purpose of this section is to provide minimum criteria for the design of bioretention filter BMPs intended to comply with the Virginia Stormwater Management program's runoff quality requirements. Bioretention filters which capture and treat the first one inch of runoff from impervious surfaces may also provide streambank erosion protection.

General

The design of bioretention filters should be in accordance with the following Minimum Standards where applicable: **3.1: Earthen Embankments, 3.2: Principal Spillways, 3.3: Vegetated Emergency Spillways, 3.4: Sediment Forebay,** as well as the additional criteria set forth below. The designer is not only responsible for selecting the appropriate components for the particular design but also for ensuring long-term operation.

Integration of the bioretention filters into the general landscaping scheme of the project must be coordinated with the landscaping professional at the inception of the design process. Use of such techniques as biomorphic shapes to present a pleasing aesthetic appearance is of equal importance with hydrological and hydraulic functioning of the basins. Properly designed bioretention filters should not be readily identifiable as stormwater BMPs by the lay observer.

Basin Sizing Methodology

In Virginia, bioretention filters are designed to filter the treatment quantity into the underlying gravel bed and collector pipe system. **Bioretention filters are sized using the same sizing methodology as that of bioretention basins**.

The elevation of the overflow structure should be 1.0 feet above the elevation of the bioretention bed.

The **Runoff Pretreatment, Drainage Considerations**, and **Exclusion of Continuous Flows and Chlorinated Flows** considerations of **MINIMUM STANDARD 3.11: BIORETENTION BASINS**, are also applicable to bioretention filters. If the filter soil remains constantly wet, anaerobic conditions will develop, which will kill the plants and cause iron phosphates which have been previously captured to break down and escape into the effluent.

Continuous or frequent flows (such as basement sump pump discharges, cooling water, condensate water, artesian wells, etc.) and flows containing swimming pool and sauna chemicals must be EXCLUDED from routing through bioretention or bioretention filter BMPs since such flows will cause the BMP to MALFUNCTION!

The **Planting Plan, Planting Soil Guidelines, Mulch Layer Guidelines, Plant Material Guidelines, Plant Growth and Soil Fertility** criteria of **MINIMUM STANDARD 3.11: BIORETENTION BASINS**, also apply to bioretention filters.

Basin Liners

Impermeable liners may be either clay, concrete or geomembrane. If geomembrane is used, suitable geotextile fabric shall be placed below and on the top of the membrane for puncture protection. Clay liners shall meet the specifications in **Table 3.11A-2**.

The clay liner shall have a minimum thickness of 12 inches.

If a geomembrane liner is used it shall have a minimum thickness of 30 mils and be ultraviolet resistant.

The geotextile fabric (for protection of geomembrane) shall meet the specifications in **Table 3.11A-3**.

TABLE 3.11A - 2
Clay Liner Specifications (Source: City of Austin)

Property	Test Method	Unit	Specification
Permeability	ASTM D-2434	Cm/Sec	1×10^{-6}
Plasticity Index of Clay	ASTM D-423 & D-424	%	Not less than 15
Liquid Limits of Clay	ASTM D-2216	%	Not less than 30
Clay Compaction	ASTM-2216	%	95% of Standard Proctor Density
Clay Particles Passing	ASTM D-422	%	Not less than 30

TABLE 3.11A - 3
Geotextile Specification for Basin Liner "Sandwich"

Property	Test Method	Unit	Specification
Unit Weight		Oz./Sq.Yd.	8 (minimum)
Filtration Rate		In./Sec.	0.08 (minimum)
Puncture Strength	ASTM D-751 (Modified)	Lb.	125 (minimum)
Mullen Burst Strength	ASTM D-751	Psi.	400 (minimum)
Tensile Strength	ASTM D-1682	Lb.	300
Equiv. Opening Size	U.S. Standard Sieve	No.	80 (minimum)

Source: City of Austin

Equivalent methods for protection of the geomembrane liner will be considered on a case by case basis. Equivalency will be judged on the basis of ability to protect the geomembrane from puncture, tearing and abrasion.

When molded chambers are incorporated into the design, a minimum of four inches of gravel or crushed stone should be added beneath the molded chambers or other conveyance system to allow settling of filter fines into the voids. As with bioretention basins, filter strips, grassed channels, and side slopes should be sodded with mature sod, and planting soil should be wrapped up the side slopes under the sod.

All other factors dealing with bioretention filters are identical to those for bioretention basins in general, **M.S.3.11.**

MINIMUM STANDARD 3.11B

GREEN ALLEYS

Definition

Green Alleys consist of a network of bioretention basins/infiltration trenches or bioretention filters that provide both redundant water quality management and stormwater conveyance to stormwater management facilities. They create a carefully landscaped green border along, or a dividing corridor through, a development site. Unless otherwise noted, the information on Green Alleys in this section was provided by Keith Bowers of Biohabitats, Inc.

Green Alleys combine the redundancy of multiple stormwater quality BMPs and stormwater conveyance with urban and suburban site design features. Using bioretention, infiltration, and filtration as a foundation, Green Alleys consist of an above ground and below ground green ribbon of interconnecting BMPs that treat the first flush of stormwater while conveying excess runoff to management facilities. While Green Alleys provide an ecosystem based stormwater management technique, they also connect and facilitate the awareness of natural ecologic and hydrologic cycles.

Above ground, Green Alleys consist of a strip (greenway) consisting of native trees, schrubs, and groundcover that replicates native forest ecosystems and landscape processes to enhance sormwater quality. Green Alleys can also consist of a mixture of hardscape and landscape incorporating such features as walkways, urban plazas, open spaces, and streetscapes. Below ground, Green Alleys consist of sand filters and infiltration trenches that are connected by a series of perforated and solid pipes or molded plastic infiltration galleries that convey excess stormwater to quantity management facilities.

Purpose

Like bioretention basins and bioretention filters, green alleys are used primarily for water quality control. A number of other benefits may also accrue from green alleys. They provide redundancy in the number of treatment techniques and, except where precluded by soil conditions, some opportunity for infiltration even where filters are used; they may reinforce the visual and physical connection between the urban environment and the surrounding natural features; they may provide a greenway corridor (hedgerow) for wildlife habitat and/or pedestrian circulation; they may provide a green buffer between different land uses; and the system continues to function even if individual parts fail.

Water Quality Enhancement

As with other bioretention facilities, the treatment volume is managed and treated through microbial action and soil chemestry (nutrient cycling), evaportransporation, adsorption, and, where applicable, soil infiltration. The manner in which these processes work is discussed under **MINIMUM STANDARD 3.11, BIOTETENTION BASINS**. **Table 3.11B-1** provides pollutant removal efficiencies for Green Alleys based on the volume of water to be treated.

TABLE 3.11B - 1
Pollutant Removal Efficiencies for Green Alleys

BMP Description	Target Pollutant Removal Efficiency (Phosphorous)
Green Alleys with capture and treatment volume equal to 0.5 inches of runoff from the impervious area.	50%
Green Alleys with capture and treatment volume equal to 1.0 inches of runoff from the impervious area.	65%

Flood Control and Channel Erosion Control

The amount of flood and channel erosion control provided by Green Alleys depends on the local rainfall frequency spectrum, the amount of pre-development (or pre-redevelopment) impervious cover, the amount of post-development impervious cover, and the volume of runoff captured and infiltered by the basin(s). The effect of the BMPs on peak flow rates from the drainage shed must be examined. As with other infiltration practices, bioretention basins tend to reverse the consequences of urban development by reducing peak flow rates and providing groundwater discharge.

Conditions Where Practice Applies

Green Alleys are generally suited for almost all types of development, from single-family residential to fairly high density commercial projects. They are attractive for higher density projects because of their relatively high removal eccifiency. The critical prerequisite is the existence of a deep enough storm sewer to accept drainage from the collector pipe system by gravity flow. All of the applications shown in **Figures 3.11-2** through **3.11-6** under **MS 3.11** may be built as bioretention filters.

Planning Considerations

Stormwater Management Concept Plan

Like all bioretention facilities, Green Alleys must be planned within the context of an overall stormwater management concept plan which addresses potential flooding and streambank erosion protection as well as water quality. This concept plan must be developed very early in the planning process to assure that sufficient space in the proper hydrological and hydraulic locations is reserved for stormwater management facilities. Minimum information necessary to develop a stormwater concept plan includes: existing and proposed drainage areas, size and capacity of downstream drainage conveyances, soils stidies, existing vegetation, and hydrographic features such as streams, floodplains, and wetlands, boundaries of Chesapeake Bay Preservation Resource Protection Areas. The plan must address the proposed location of areas of impervious cover on the site, the methods for collection and conveyance of runoff to an adequate channel or conduit, proposed detention facilities to address streambank erosion and potential flooding, and the proposed methods of providing quality treatment of the runoff.

Site Conditions

The **Site Conditions** considerations for for bioretention basins contained in **MINIMUM STANDARD 3.11: BIORETENTION BASINS** and **MS 3.11A: Bioretention Filters**, apply to Green Alleys which employ these BMPs. The same drainage area range applies, as do the same **Location Considerations.** In addition to site conditions, the following apply specifically to bioretention basins.

All other considerations for **M.S. 3.11, Bioretention Basins**, apply to Green Allies.

Bioretention Filter in ultra-surban setting. Note curb cut, gravel energy dissipater, and clean out/observation wells.

Bioretention Filter located in required parking lot green space.

Bioretention Basin Practices

Chapter 3.11

Bioretention Filter in multi-family residential setting.

Bioretention Basins in office setting parking lot.

Bioretention Basin Practices

MINIMUM STANDARD 3.12

GENERAL INTERMITTENT SAND FILTERS

3.12A	Washington D.C. Underground Vault Sand Filter
3.12B	Delaware Sand Filter
3.12C	Austin Surface Sand Filter

View BMP Images

LIST OF ILLUSTRATIONS

#	FIGURES	PAGE
3.12-1	Austin Partial Sedimentation Surface Sand Filter	3.12-1
3.12-2	Flow Splitting Manhole Structure	3.12-11
3.12-3	Degradation of Hydraulic Conductivity of Denver Sand Filter	3.12-13
3.12-4	Full Sedimentation Basin on Austin Sand Filter	3.12-14
3.12A-1	Washington D.C. Underground Vault Sand Filter	3.12A-2
3.12A-2	Washington D.C. Sand Filter Cross-Section	3.12A-5
3.12A-3	Dimensional Relationship for a D.C. Sand Filter	3.12A-10
3.12A-4	Installing Precast D.C. Sand Filter Shell in Alexandria	3.12A-13
3.12A-5	D.C. Sand Filter Cross-Section with HDPE Infiltration Chamber Collection System	3.12A-14
3.12B-1	Precast Delaware Sand Filter as Used in Virginia	3.12B-2
3.12B-2	Dimensional Relationships for Delaware Sand Filter	3.12B-5
3.12B-3	Installing Precast Delaware Sand Filter Shell in Alexandria	3.12B-13
3.12C-1	Austin Full Sedimentation Sand Filter at Barton Ridge Plaza	3.12C-2
3.12C-2	Sedimentation Basin of Jolleyville Partial Sedimentation System	3.12C-3
3.12C-3	Underground Vault Fabricated from Precast Bridge Arch Components	3.12C-5
3.12C-4	Riser Pipe Detail for Full Sedimentation Basin	3.12C-14
3.12C-5	Austin Sand Filter Cross-Section with Filter Fabric Layer	3.12C-15
3.12C-6	Partial Sedimentation Vault Filter with Pea Gravel Layer	3.12C-16
3.12C-7	Restrictive Orifice Access Manhole	3.12C-19

LIST OF ILLUSTRATIONS cont.

#	TABLES	PAGE
3.12-1	Pollutant Removal Efficiency for Intermittant Sand Filter Facilities	3.12-2
3.12-2	Pollutant Removal Efficiencies for a Delaware Sand Filter in Alexandria	3.12-3
3.12-3	Appropriate Intermittant Sand Filter Applications to Various Site Areas	3.12-6
3.12-4	Percent of Street Pollutants in Various Particle Size Ranges	3.12-9
3.12A-1	Specifications for Nonwoven Geotextile Fabric on Top of D.C. Sand Filter	3.12A-7
3.12A-2	Specifications for Nonwoven Geotextile Fabric beneath the Sand in a D.C. Sand Filter	3.12A-7
3.12B-1	Specifications for Nonwoven Geotextile Fabric on Top of Delaware Sand Filter	3.12B-7
3.12B-2	Specifications for Nonwoven Geotextile Fabric Beneath Sand in Delaware Sand Filter	3.12B-7
3.12C-1	Cost of Austin Sand Filtration Systems	3.12C-4
3.12C-2	Clay Liner Specifications	3.12C-11
3.12C-3	Geotextile Specifications for Basin Liner Sandwich	3.12C-12
3.12C-4	Perforated Riser Pipes	3.12C-13
3.12C-5	Specifications for Nonwoven Geotextile Fabric Beneath Sand in Austin Sand Filter	3.12C-14

MINIMUM STANDARD 3.12

GENERAL INTERMITTENT SAND FILTER PRACTICES

Definition

Intermittent sand filter facilities capture, pretreat to remove sediments, store while awaiting treatment, and treat to remove pollutants (by percolation through sand media) the most polluted stormwater (the water quality volume) from a site. Intermittent sand filter BMPs may be constructed in underground vaults, in paved trenches within or at the perimeter of impervious surfaces, or in either earthen or concrete open basins. They have been successfully used in Austin Texas, the District of Columbia, The State of Delaware, and in Alexandria, Virginia over the last two decades. **Figure 3.12-1** is a photograph of a sand filter BMP in Austin.

FIGURE 3.12 - 1
Austin Partial Sedimentation Surface Sand Filter

(Photo Courtesy of City of Austin, Texas)

Purpose

Intermittent sand filter facilities are primarily used for water quality control. However, they do provide detention and slow release of the water quality volume from the site being treated. Whether this amount will be sufficient to provide the necessary peak flow rate reductions required for channel erosion control is dependent upon site conditions (hydrology) and required discharge reductions. The 10-year and 100-year flows will usually exceed the detention capacity of a sand media filter. When this occurs, separate quantity facilities must be provided. Table 3.12-1 contains the target removal efficiencies of sand and other soil media filter BMPs. Table 3.12-2 contains the results of an extensive sand filter monitoring study in Alexandria conducted for the Chesapeake Bay Local Assistance Department (Bell, Stokes, Gavan, and Nguyen, 1995).

TABLE 3.12-1
Pollutant Removal Efficiency for Intermittent Sand Filter Facilities

BMP Description	Target Phosphorus Removal Efficiency
Intermittent Sand Filter treating 0.5 inches of runoff from the impervious area.	65%

Pollutant Removal Mechanisms at Work in Intermittent Sand Filter BMPs

Pollutant removal processes at work in intermittent sand filters are complex and involve physical, chemical, and biological transformations (Tchobanoglous and Burton, 1991; Anderson, Siegrist, and Otis, Undated). The most obvious mechanism is physical straining of suspended solids and particulate nutrients.

Suspended Solids

Mechanical straining, straining due to chance contact, and sedimentation are the principal mechanisms by which suspended solids are removed, although the growth of bacterial colonies within the sand grains may also cause autofiltration (Tchobanoglous and Burton, 1991).

Table 3.12-2
Pollutant Removal Efficiencies for a Delaware Sand Filter in Alexandria

Constituent	Mass Balance Removal Efficiency (%)
Cadmium	NA
Copper	NA
Zinc	>90.7
Iron	NA
Ammonia Nitrogen	>39.0
Nitrite Nitrogen	>45.8
Nitrate Nitrogen	-62.7
NO_x	-53.3
Total Kjeldahl Nitrogen	70.6
Total Phosphorous	63.1/72.3[1]
Ortho-Phosphorous	>68.3/74.4[1]
Total Suspended Solids	>78.8/>83.9[2]
Hardness	38.5
Biochemical Oxygen Demand (5 Day)	>77.5
Total Petroleum Hydrocarbons	>84[3]
Total Organic Carbon	65.9

[1] Excluding Anaerobic Incident Data [2] Excluding Storms with Heavy Iron Export
[3] Average Removal from Alaska Marine Lines Filter 3 in Seattle, Washington (Horner,1995)

Phosphorous

Phosphorous removal is performed by physiochemical processes such as mechanical and chance contact straining, precipitation, and adsorption (Piluk and Hao, 1989; Laak, 1986).

There are three general types of adsorption (the condensation and concentration of ions or molecules of one material [the adsorbate] on the surface of another [the adsorbent]): physical,

chemical, and exchange. Physical adsorption results from the weak forces of attraction between molecules and is generally quite reversible. Chemical adsorption results from much stronger forces comparable to those leading to the formation of chemical compounds, with the adsorbed material forming a one molecule thick layer over the surface of the absorbent until the capacity of the absorbent is exhausted. Chemical adsorption is seldom reversible. Exchange adsorption, on the other hand, results from electrical attraction between the adsorbate and the surface, such as occurs with ion exchange. Ions of the adsorbate concentrate on the surface of the adsorbent as a result of electrical attraction to opposite charges on the surface. It is sometimes difficult to assign a given adsorption to a specific type (Sawyer, Mcarty, and Parkin, 1994).

Although exchange adsorption may also be involved, most adsorption in intermittent sand filters appears to be chemical adsorption (Piluk and Hao, 1989; Otis, Undated; Anderson, Siegrist, and Otis, Undated).

In addition to the **filter mass available**, the adsorption of phosphorous in sand filters is also affected by the pH of the material being filtered (with higher removal rates occurring with the reduction of pH), temperature, contact time, and the character of the filter media (Laak, 1986). Sands containing iron, aluminum, or calcium have a higher phosphorous removal potential because phosphorous will combine with these elements through chemical precipitation and become relatively insoluble (Laak, 1986, Tchobanoglous and Burton, 1991). If the filter becomes anaerobic, the bonding with iron may break down, releasing orthophosphates (Harper and Herr, 1993). However, aerobic filters enriched with iron may attain almost complete phosphorous removal until the filter capacity is exhausted, and properly sized filters may have a life of up to 20 years (Laak, 1986). Sand particles with sufficient iron content may become positively charged, leading to more favorable medium-particle interactions and increased removal rates (Stenkamp and Benjamin, 1994). Entrapment in the filter of a high percentage of the iron in the runoff being treated may provide a source to replenish used up phosphorous adsorption capacity.

Nitrogen and Biochemical Oxygen Demand

Mineralization of organic nitrogen into ammonium (NH^+_4) may occur under either aerobic or anaerobic conditions if the required naturally occurring chemoautotrophic bacteria (organisms which obtain energy by oxidizing simple chemical compounds) are present (*Nitrosomonas, Nitrosococcus, Nitrospira, Nitrosolobus, Nitrososovibrio*) ((Laak, 1986; The Cadmus Group, 1991).

Organic N 6 Bacterial enzymes 6 NH_4^+ + other products

Positively charged ammonium ions are then adsorbed to negatively charged sand filter particles through exchange adsorption (The Cadmus Group, 1991).

The transformation of ammonia (NH_3) and ammonium into nitrite and nitrate (NO_2^- and NO_3^-) and the removal of BOD_5 occur under aerobic conditions by microorganisms (such as *Nitrosomonas* and *Nitrobacter*) present in the sand bed (Tchobanoglous and Burton, 1991;, Laak, 1991; The Cadmus Group, 1991).

$NH_4^+ + 1.5O_2$ 6 *Nitrosomonas*, etc 6 $NO_2^- + 2H + H_2O$ + Energy

$NO_2^- + 0.5O_2$ 6 *Nitrobacter* 6 NO_3^- + Energy

Since nitrite and nitrate are soluble anions, they are not affected by the cation exchange complex of the filter, but rather tend to leach readily to the filter effluent (Gold, Lamb, Loomis, and McKiel, Undated). However, anaerobic microenvironments (sometimes called "microsites") routinely coexist in principally aerobic intermittent sand filters (Tchobanoglous and Burton,1991; Gold, Lamb, Loomis, and McKiel, Undated). Naturally occurring anaerobic bacteria (*Pseudomonas, Micrococcus*, *Achromobacter, Bacilluss*) in these pockets may convert much of the nitrite into nitrate and the nitrate to nitrogen gas, resulting in total nitrogen removal in intermittent sand filters ranging up to 45-50 percent (Tchobanoglous and Burton, 1991; Laak, 1986; Ronayne, Paeth, and Osborne, Undated).

NO_3^- + Organic Carbon 6 Denitrifying bacteria 6 $N_2 + H_2O + CO_2$ + Cells

Organic carbon must be present for denitrification to occur, but low organic carbon/nitrogen rations will suffice (1:2 or less) (Laak, 1986, p.62). Some studies indicate that optimal denitrification occurs at ratios of 1:1-3:1 (Gold, et al, p.298). The maximum rate of denitrification occurs at temperatures above 10 degrees C and at a pH above 5.5, with the optimum pH range falling between 7.0 and 8.0. (The Cadmus Group, 1991, p.11). However, home wastewater systems have demonstrated excellent denitrification performance when the wastewater temperature was as low as 4 degrees C (Piluk and Hoa, 1989).

Heavy Metals

More than 70 percent of heavy metals in stormwater runoff is in particulate form (Harper and Herr, 1993). Over 70 percent of particulate heavy metals are of greater than 104 microns in size (Shaver and Baldwin, 1990). Particle settling in presettling basins and mechanical straining appear to be the principal mechanism for removing heavy metals in stormwater intermittent sand filter systems. Some iron may be removed by reacting with phosphorous in the runoff being treated.

Hydrocarbons

Mechanical straining and physical adsorption appear to be the mechanisms removing hydrocarbons which reach the sand filter.

Conditions Where Practice Applies

Intermittent sand filters are suitable for use in ultra-urban settings with a high degree of imperviousness where the land cost or loss of economic return on real estate required to construct retention basins may be prohibitive. They are generally suited for high pollutant removal on medium to high density development (65 to 100% impervious cover). Specific conditions such as drainage area size and development conditions are discussed with each type of intermittent sand filter. Because they are subject to failure by clogging, intermittent sand filters are not recommended for use on watersheds where sediment loadings can be significant. Wherever possible, their use should be limited to treating runoff from impervious surfaces. Most of the practices discussed below are designed to treat runoff from watersheds with at least 65% impervious cover. Where other runoff must be treated, sediment protection must be increased to severely curtail the sediment load reaching the filter media.

Planning Considerations

Site Conditions

1. *Size and Topography of the Site*

Some types of intermittent sand filter BMPs are especially suited to larger drainage sheds, while others have upper size limits on their effective use. **Table 3.12-3** outlines drainage shed size applications of various types of intermittent sand filter facilities. On larger sites with multiple drainage sheds, a variety of BMPs might prove to be most cost effective.

TABLE 3.12 - 3
Appropriate Intermittent Sand Filter Applications to Various Site Areas

Type of Intermittent Sand Filter	Appropriate Drainage Shed to filter
District of Columbia Underground Vault Sand Filters	Medium (0.25-1.25 impervious acres)
Delaware Sand Filters	Small-Medium ($\leq$ 1.25 impervious acres)
Austin Full Sedimentation Sand Filters (Surface or Vault)	Large ($\geq$ 1.25 impervious acres)
Austin Partial Sedimentation Sand Filters (Surface)	Medium-Large
Austin Partial Sedimentation Sand Filters (Underground)	Medium

2. *Stormwater Infrastructure Serving Site*

Both the size and the elevations of stormwater infrastructure serving the site as a whole are important considerations. A critically important design parameter is the potential difference in elevation of the receiving manhole in the stormwater infrastructure and the elevation of the closest manhole in the new storm sewer system draining the site to be served. This will determine the depth of water than can be pooled above the filter media with the system operating on gravity flow. Almost all intermittent sand filter BMPs are designed to flow by gravity. However, in commercial and industrial applications where dedicated maintenance crews with familiarity with mechanical equipment will be available, pumped flow should be considered a viable alternative.

3. *Depth to Seasonally High Groundwater Table*

The liner or concrete shell of intermittent sand filter BMPs is usually placed at least 2 to 4 feet above the seasonally high water table or bedrock in order to assure dry conditions for construction and to minimize infiltration of groundwater into the filter structure. However, in some cases, it may be economical and practical to place filter shells below the seasonally high water table. In such cases, floatation effects must be countered by providing extra weight or hold down components in the filter shell.

4. *Value of the Real Estate and Expected Income from Development*

The value of real estate in highly urbanized areas may drive the overall cost of traditional structural BMPs too high for serious consideration. In Alexandria, for example, the cost of real estate alone to construct retention ponds averages $60,000 per impervious acre treated, while the cost of real estate for extended detention basins averages $40,000 per impervious acre treated. The overall costs of underground vault sand filters, which may be placed under parking lots and private streets or even within building structures and therefore have no real estate cost, can become quite competitive under such circumstances. The income stream from increased development allowed by underground BMPs should also be considered in such analyses.

5. *Aesthetic and Land Use Considerations*

Most traditional stormwater BMPs may be severely lacking in visual attractiveness. This may be especially true with some extended detention basins and retention basins lacking a base flow to prevent eutrophication during hot, dry weather. Questions also often arise about the use of valuable open space on projects for BMPs instead of alternative uses such as recreation. Most sand filter BMPs are visually unobtrusive and may be used in situations where aesthetic considerations or open space use are important.

Sediment Control

Intermittent sand filter BMPs which have been subjected to heavy sediment loadings have historically failed very quickly (LaRock, 1988; Harper and Herr, 1993). In a study in Denver, Colorado, Urbonis, Doerfer, and Tucket found that the hydraulic conductivity of a sand filter serving an equipment parking lot dropped rapidly as sediment accumulated on the surface of the filter (Urbonis, Doerfer, and Tucker, 1996). A layer of sediment approximately 1/16 inch (1.6 millimeters) thick was found to limit hydraulic conductivity to 0.05 feet per hour (1.6 ft/day), considerably less than the design coefficient of permeability used by Northern Virginia jurisdictions in the design of sand filters (*ibid.;* Bell, Stokes, Gavan, and Nguyen, 1995). The filter media of intermittent sand filter BMPs must therefore be protected from excessive sediment loads. This requires isolation during construction of the development, site design to restrict the amount of runoff from pervious areas reaching the filter after construction, and proper sizing of sediment removing features of the BMP to match final site conditions.

1. *Construction Runoff*

*Sand filter BMPS must **never** be placed in service until all site work has been completed and stabilization measures have been installed and are functioning properly.*

When this precaution has not been taken in the past, the sand filter BMPs have become clogged with sediment from upland construction operations almost immediately, requiring complete reconstruction of the sand filter and sometimes the collector pipe system. This can prove very expensive. However, since most sand filter BMPs are constructed off-line with a flow splitting device employed to divert only the Water Quality Volume to the filter, the BMP may usually be completely constructed but isolated from runoff by blocking the inflow pipe until the site is fully stabilized.

2. *Urban Runoff*

While experience indicates that intermittent sand filters fail very quickly when directly exposed to runoff from watersheds with low imperviousness and poor vegetated cover (LaRock, 1988; Harper and Herr, 1993), filters which treat runoff from almost exclusively impervious areas, such as highway surfaces, may perform satisfactorily for several years with very little maintenance (Shaver and Baldwin, 1991).

An 18-month, comprehensive study of runoff from street surfaces in 12 cities throughout the U.S. determined that, while most particulate matter is in the fractions equating to sand and gravel, the approximately 6 percent of particles in the silt and clay soil size contain over half the phosphorous and some 25 percent of other pollutants (Sartor, Boyd, and Agardy, 1974). **Table 3.12-4** illustrates this finding.

In planning the layout for a site on which sand filter BMPs are to be employed, care should be taken to direct only runoff from impervious surfaces to the filter insofar as possible. The drainage sheds feeding sand filter BMPs with only partial sediment protection (as delineated in the individual BMP

discussions which follow) should ***never*** contain less than 65% impervious cover. Even when full sediment protection is provided in the form of a carefully sized presettlement basin, the amount of runoff from pervious areas directed to the filter must be minimized. The Denver study also indicates that full sediment protection may be required in areas subject to heavy atmospheric deposition of suspended solids even when only runoff from impervious surfaces is being treated.

The presettling basin or sedimentation chamber of an intermittent sand filter BMP is expected to remove all but the very fine particles of sediment, while most of the other pollutant removal is expected to occur in the sand filter, where the very fine particles will be trapped.

TABLE 3.12-4
Percent of Street Pollutants in Various Particle Size Ranges

	Particle Size (Microns)					
Pollutant	**>2000**	**840-2000**	**246-840**	**104-246**	**43-104**	**<43**
Total Solids	24.4	7.6	24.6	27.8	9.7	5.9
Volatile Solids	11.0	17.4	12.0	16.1	17.9	25.6
COD	2.4	4.5	13.0	12.4	45.0	22.7
BOD_5	7.4	20.1	15.7	15.2	17.3	24.3
TKN	9.9	11.6	20.0	20.2	19.6	18.7
Phosphates	0	0.9	6.9	6.4	29.6	56.2
All Toxic Metals	16.3	17.5	14.9	23.5	-	27.8

(Source: Shaver and Baldwin, 1990; adapted from Sartor, Boyd, and Agardy, 1974)

Trash Exclusion

Underground vault BMPs are confined space under Occupational Safety and Health Regulations and are therefore more expensive to enter and maintain than open facilities. Future operations and maintenance costs can substantially reduced by assuring that trash is, insofar as possible, excluded from entering the vault. Grated storm inlets and trash racks in flow splitters are two ready solutions to this problem.

Projected Hydrocarbon Loadings

Sand filters will quickly clog when subjected to direct heavy hydrocarbon loadings. Where such loadings are expected, a design which removes unemulsified hydrocarbons in a separate chamber or structure in the treatment train ahead of the filter should be selected.

Maintenance

The maintenance requirements for intermittent sand filters must be considered during the planning and design of the facility. All chambers of underground sand filters must have personnel access manholes and built-in access ladders . Access roads or streets must be of sufficient width and bearing capacity to support dump trucks loaded with accumulated sediments or heavy vacuum (e.g."VACTOR") trucks for removing accumulated sediments and hydrocarbons from sediment chambers and traps on a regular basis. Approximately every 3-5 years, the filter can be expected to clog to the point that replacement of the top few inches of sand or, where employed, the layer of washed gravel and the top layer of filter cloth will be required. **A minimum maintenance headspace of 60 inches above the filter is required in underground vault filters BMPs.** A 36-38-inch diameter maintenance manhole with a small, concentric personnel access lid or a rectangular load bearing access door (minimum 4 ft. x 4 ft.) should be positioned directly over the center of the filter. Large sedimentation basins and open filters must be equipped with access ramps to allow small earthmoving equipment such as "Bobcats" and light trash raking equipment to go into the basins. Finally, before finalizing the BMP design, follow the advice of Joseph J. Skupien, Principal Hydraulic Engineer of Somerset County, New Jersey, and "close your eyes, kick back, and think your BMP through a full year of operations, visualizing how it will perform under the conditions of all four seasons."

General Design Criteria

The purpose of this section is to provide recommendations and minimum criteria for the design of intermittent sand filter practices intended to comply with the Virginia Stormwater Management program's runoff quality requirements.

Several types of intermittent sand filter facilities are recognized for stormwater quality management purposes, including ***District of Columbia Underground Vault Filters***, ***Delaware Sand Filters, Austin Full Sedimentation Sand Filters,*** and ***Austin Partial Sedimentation Sand Filters***.

The general design criteria presented below apply to the design of intermittent sand filter facilities for ***water quality control***. This implies that the volume of runoff to be treated is determined by the **water quality volume** (the first 0.5 inches of runoff from the impervious surfaces on the site or drainage shed) and the desired pollutant removal efficiency.

Isolating the Water Quality Volume

The usual method for isolating the WQV is to construct an isolation/diversion weir in the stormwater channel or pipe, with the elevation of the weir set to allow overflow when the BMP is completely full. Additional runoff greater than the WQV spills over the weir to enter a peak flow rate reducer or exit directly to the storm sewer, minimizing mixing with the water in the BMP. Another approach is to provide a lower pipe to feed the filter until it fills, after which water rises in the slitter manhole and continues down a higher pipe. **Figure 3.12 - 2** illustrates this approach (source: Montgomery County, Maryland).

FIGURE 3.12 - 2
Flow Splitting Manhole Structure

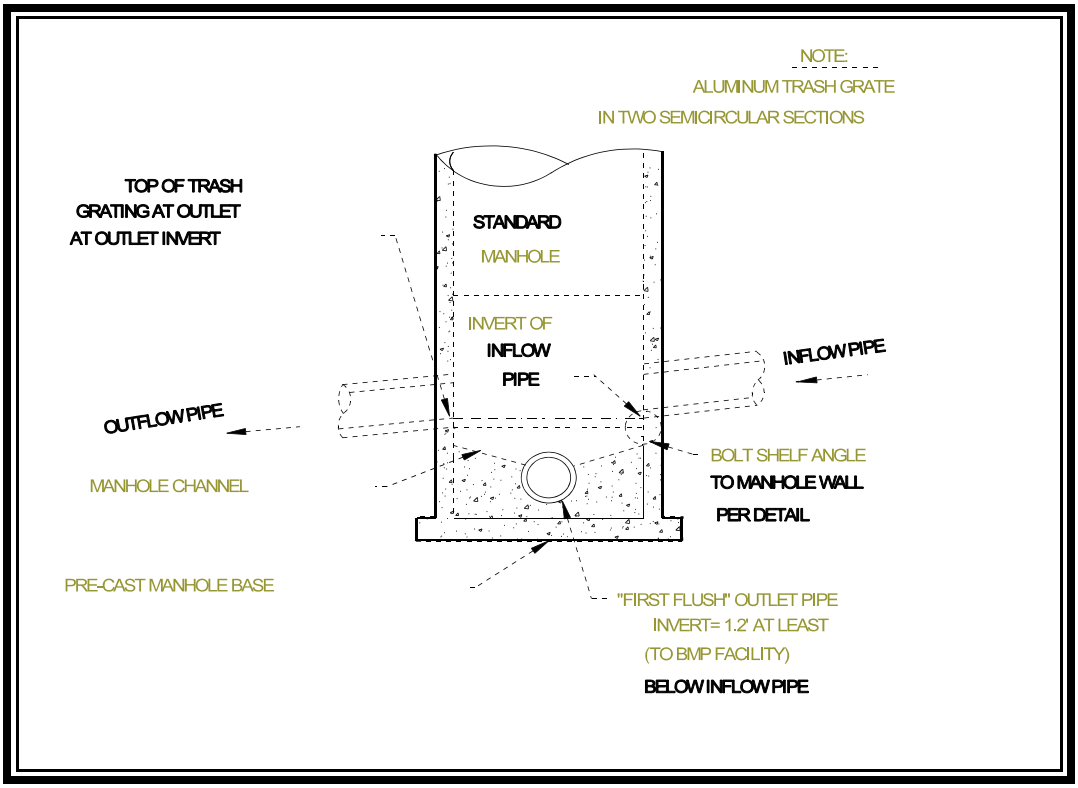

Sizing Procedure

The majority of jurisdictions which are employing sand filter BMPs use hydraulic calculations based on Darcy's Law to establish the filter area that will allow flow-through of the treatment volume within the desired time frame, typically 40-48 hours (Austin, 1988, Shaver and Baldwin, 1991, Truong, 1989). Florida uses more complex falling-head computations and allows a drawdown time of up to 72 hours (Livingston, McCarron, Cox, and Sanzone, 1988). However, creating storage for the full WQV in shallow configuration systems may result in a larger filter than the hydraulic calculations would indicate (Alexandria, 1992).

Virginia uses the Austin Sand Filter Formula derived from Darcy's Law by the Austin Environmental and Conservation Services Department to size sand filters (Austin, 1988):

$A_f = I_a H d_f / k(h+d_f)t_f$ where,

A_f = surface area of sand bed (acres or sq. ft.)
I_a = impervious drainage area contributing runoff to the basin (acres or sq. ft.)
H = runoff depth to be treated (ft.)
d_f = sand bed depth (ft.)
k = coefficient of permeability for sand filter (ft/hr)

h = average depth (ft.) of water above surface of sand
media between full and empty basin conditions (½ max. depth)
t_f = time required for runoff volume to pass through filter media (hrs.)

1. Coefficient of Permeability

When first installed, the coefficient of permeability of sand filters may be as high as 3.0 ft/hour, but these will typically decrease dramatically after the first few storms. Actual observations of filters in Austin, Texas, established that "ripe" filters stabilized in the range of 0.5-2.7 ft/day for filters with partial sedimentation control (Austin, 1988). This is probably caused by a combination of clogging of some filter pores from sediment loads and initial consolidation of the filter sand. **Figure 3.12 - 3** illustrates the similar rapid decrease in coefficient of permeability as sediment loads accumulated on a sand filter in Denver, Colorado (Urbonas, Doerfer, and Tucker, 1996). Falling head tests on a one year old Delaware Sand Filter in Alexandria, Virginia, resulted in an average coefficient of permeability of 8.5 ft/day (Bell, Stokes, Gavan, and Nguyen, 1995). The Alexandria filter was treating only runoff from pavement surfaces, and the mean input concentration of total suspended solids was only in the range of 75 milligrams/liter (75ppm)(*ibid)*. The Denver runoff, by contrast, had a mean concentration of 400 ppm (Urbonas, Doerfer, and Tucker, 1996), while the filters observed by Austin lacked full sedimentation protection. Use of conservative values for the coefficient of permeability is clearly indicated.

Based on long term observation of existing sand filter basins, Austin uses k values of 3.5 feet per day for systems with full sedimentation pretreatment and 2.0 feet per day for systems with only partial sedimentation pretreatment (full sedimentation pretreatment is defined as complete removal of particles with a diameter equal to or greater than 20 microns). Virginia jurisdictions utilizing intermittent sand filter BMPs have also adopted these values. Full sedimentation may usually be accomplished by capturing the WQV and releasing it to the filter over 24 hours. **Figure 3.12-4** illistrates a full sedimentation basin in Austin. Partial sedmientation basins, such as the one shown on **Figure 3.12-1**, should hold at least 20 percent of the WQV.

2. Drawdown time

Both Austin and the Virginia jurisdictions employ a BMP drawdown time (t_f) of 40 hours. This allows the filter to fully drain down and dry out to maintain an aerobic environment between storms (filters which remain continually wet may develop anaerobic conditions, under which previously captured iron phosphates may break down and wash out).

3. Simplified Filter Formula for Filters with Full Sedimentation Protection
(Sedimentation Basin containing full WQV with 24-hour drawdown to filter)

With k = 3.5 ft/day (0.146 ft/hour) and t_f = 40 hours, the sand filter formula reduces to:

$$A_{f(FS)} = 310 I_a d_f / (h + d_f)$$

where A_f is in ft^2 and I_a is in acres.

FIGURE 3.12-3
Degradation of Hydraulic Conductivity of Denver Sand Filter

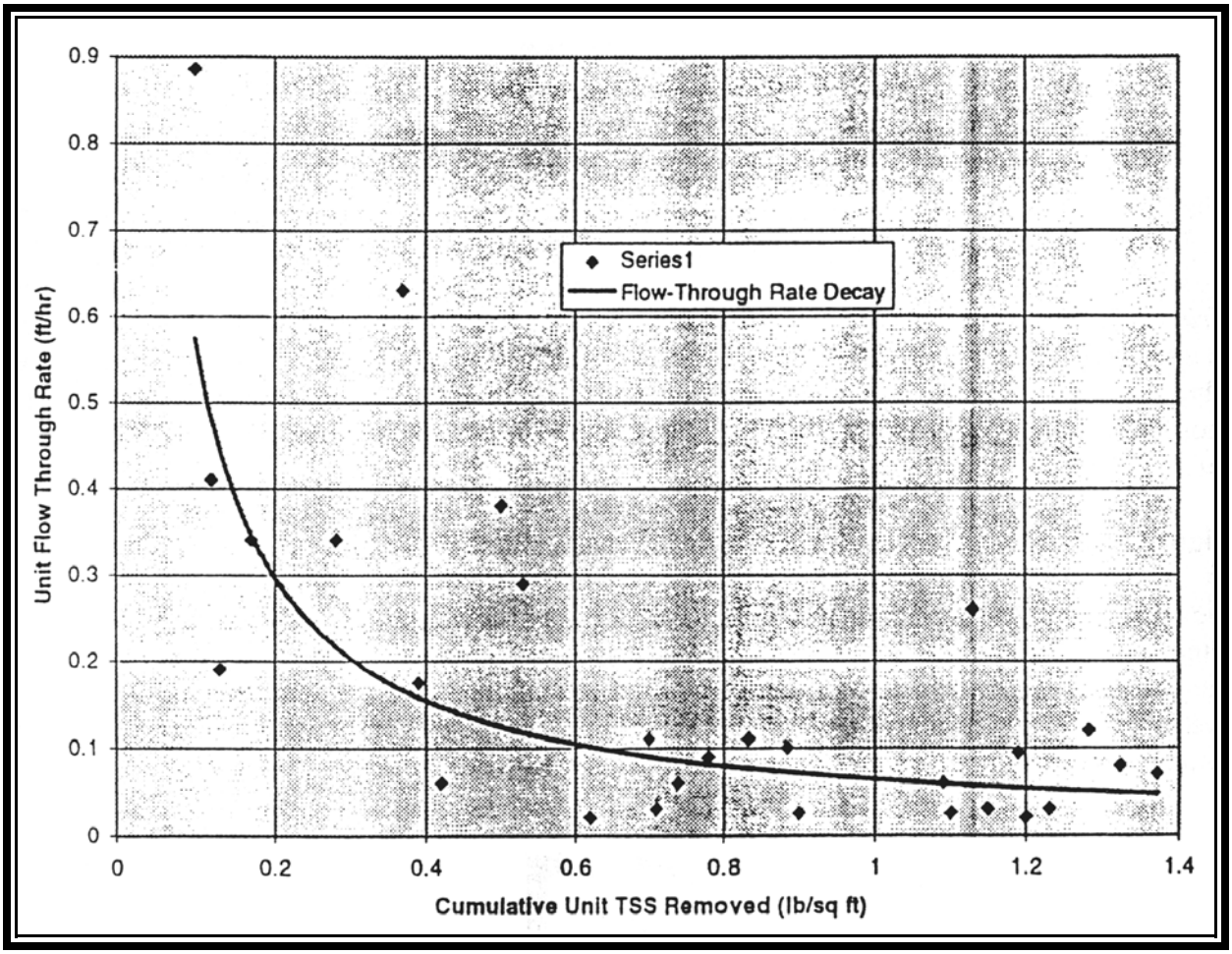

(Source: Urbonas, Doeffler, and Tucker, 1996)

4. Simplified Filter Formula for Filters with Partial Sedimentation Protection
(Sediment Chamber containing 20% of WQV with free hydraulic flow to filter)

With k = 2.0 ft/day (.0833 ft/hour) and t_f = 40 hours, the formula reduces to:

$$A_{f(PS)} = 545 I_a d_f / (h + d_f)$$

where A_f is in ft^2 and I_a is in acres.

FIGURE 3.12-4

Full Sedimentation Basin on Austin Sand Filter

Exclusion of Continuous Flows and Chloronated Flows

Intermittent sand filter BMPs will **NOT** function properly if subjected to continuous or frequent flows. The basic principles upon which they operate assume that the sand filter will dry out and reaerate between storms. If the sand is kept continually wet by such flows as basement sump pumps, anaerobic conditions will develop, creating a situation under which previously captured iron phosphates degrade, leading to **export** of phosphates rather than the intended high phosphorous removal (Bell, Stokes, Gavan, and Nguyen, 1995). It is also essential to **exclude flows containing chlorine and other swimming pool and sauna chemicals** since these will kill the bacteria upon which the principle nitrogen removal mechanisms depend.

Continuous or frequent flows (such as basement sump pump discharges, cooling water,condensate water, ariesian wells, etc.) and flows containing swimming pool and sauna chemiclals *must be* ***EXCLUDED*** *from routing through intermittent sand filter BMPs since such flows will cause the BMP to* ***MALFUNCTION!***

Checklists

The **Construction Inspection and As-Built Survey Checklist** found in **Appendix 3D** is for use in inspecting intermittent sand filter facilities during construction and, where required by the local jurisdiction, engineering certification of the filter construction. The **Operation and Maintenance Checklist**, also found in **Appendix 3D**, is for use in conducting maintenance inspections of intermittent sand filter facilities.

MINIMUM STANDARD 3.12A

WASHINGTON D.C. UNDERGROUND VAULT SAND FILTER
(WET SEDIMENTATION CHAMBER)

Definition

A Washington D.C. vault sand filter is an underground stormwater sand filter contained in a structural shell with three chambers. The shell may be either precast or cast-in-place concrete, corrugated metal pipe, or fiberglass tanks. This BMP was developed by Mr. Hung V. Truong of the D.C. Environmental Regulation Administration. **Figure 3.12A-1** depicts Mr. Truong's system.

The three feet deep plunge pool in the first chamber and the throat of the second chamber, which are hydraulically connected by an underwater rectangular opening, absorbs energy and provides pretreatment, trapping grit and floating organic material such as oil, grease, and tree leaves.

The second chamber also contains a typical intermittent sand filter. The filter material consists of gravel, sand, and filter fabric. At the bottom is a subsurface drainage system of pierced PVC pipe in a gravel bed. The primary filter media is 18-24 inches of sand. A layer of plastic reinforced geotextile filter cloth secured by gravel ballast is placed on top of the sand. The top filter cloth is a pre-planned failure plane which can readily be replaced when the filter surface becomes clogged. A dewatering drain controlled by a gate valve must be installed to facilitate maintenance.

The third chamber, or clearwell, collects the flow from the underdrain pipes and directs it to the storm sewer.

In Virginia, D.C. Sand Filters will normally be placed off-line and be sized to treat the WQV.

Purpose

D.C. Sand Filters are primarily used for water quality control. However, they do provide detention and slow release of the water quality volume from the site being treated. Whether this amount will be sufficient to provide the necessary peak flow rate reductions required for channel erosion control is dependent upon site conditions (hydrology) and required discharge reductions. The 10-year and 100-year flows will usually exceed the detention capacity of a sand media filter. When this occurs, separate quantity must be provided.

FIGURE 3.12A - 1
Washington D.C. Underground Vault Sand Filter

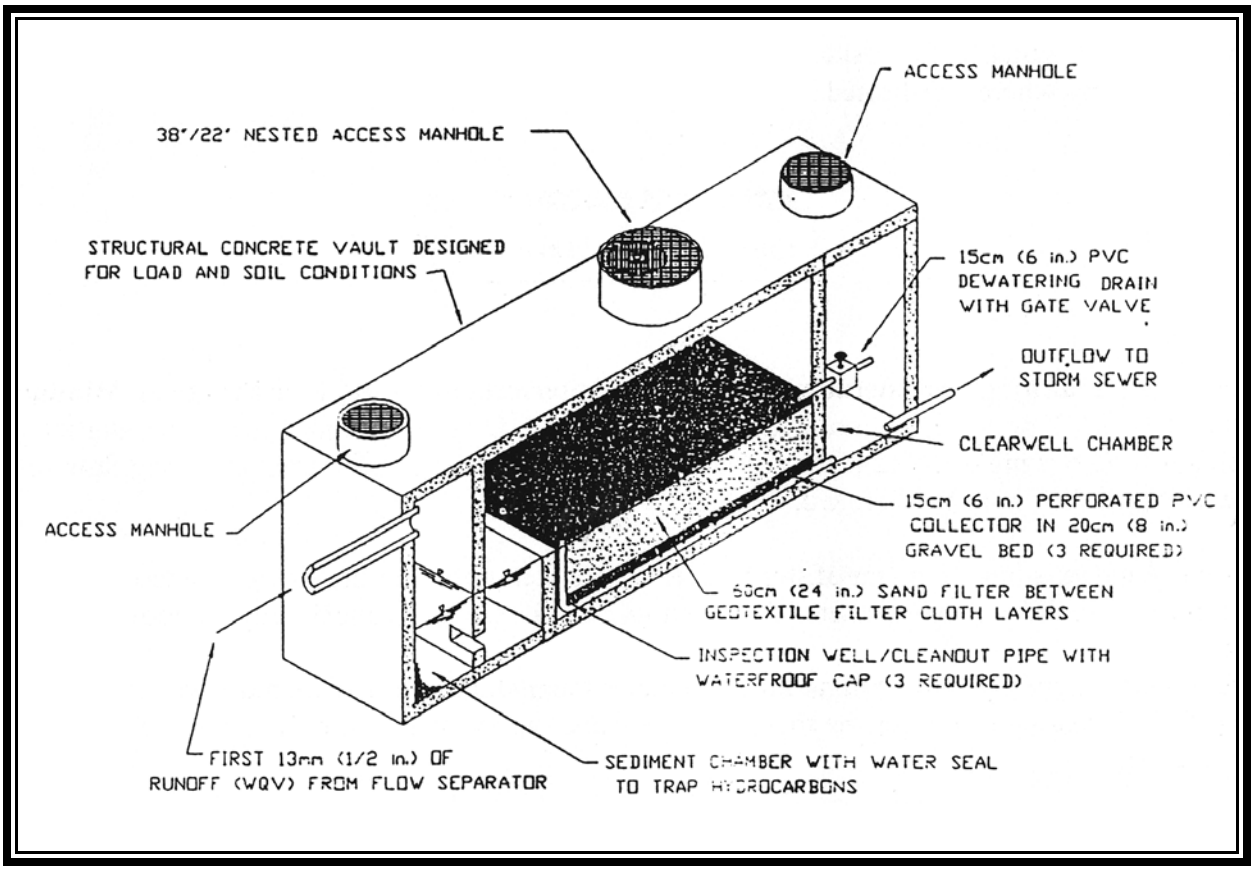

Conditions Where Practice Applies

D.C. Sand Filters are ultra-urban BMPs best suited for use in situations where space is too constrained and/or real estate values are too high to allow the use of conventional retention ponds. Where possible, runoff treated should come only from impervious surfaces.

Drainage Area

Drainage areas served by one vault filter should be limited to 1.25 acres. For larger drainage sheds, either multiple vault filters or Austin Full Sedimentation Filters (surface or vault) should be utilized.

Development Conditions

D.C. Sand Filters are generally suitable BMPs for medium to high density commercial or industrial development. Because of confined space entry restrictions and maintenance requirements, they are not generally suitable for residential applications except for apartment complexes or large condominiums where a dedicated maintenance force will be present.

Planning Considerations

Refer to the **Planning Considerations** for **General Intermittent Sand Filter Practices, Minimum Standard 3.12,** previously discussed in this section. Of special concern are the stormwater infrastructure serving the site and the requirement to isolate the sand filter from receiving flows until the drainage shed is fully stabilized.

Potential and existing elevations of stormwater infrastructure serving the site will determine one of the most critical design parameters: the maximum depth to which runoff may be pooled over the filter and preserve a gravity flow configuration (whatever the pooling depth, there must be a minimum of five feet of clearance between the top of the filter and the top slab of the filter shell to allow filter maintenance).

*Sand filter BMPS must **never** be placed in service until all site work has been completed and stabilization measures have been installed and are functioning properly.*

Design Criteria

The purpose of this section is to provide recommendations and minimum criteria for the design of D.C. Sand Filter BMPs intended to comply with the Virginia Stormwater Management program's runoff quality requirements.

Refer to the **General Design Criteria** previously discussed under **General Intermittent Sand Filter Practices, Minimum Standard 3.12**

Filter Sizing Criteria

The D.C. Sand Filter is a partial sedimentation protection intermittent sand filter BMP. To compute the minimum area of filter required, utilize the Austin Filter Formula for partial sedimentation treatment:

$$A_{fm(PS)} = \frac{545 I_a d_f}{(h + d_f)}$$

where,

A_{fm} = minimum surface area of sand bed (square feet)
I_a = impervious cover on the watershed in acres
d_f = sand bed depth (normally 1.5 to 2ft)
h = average depth of water above surface of sand media between full and empty basin conditions (ft.)

Structural Requirements

The load-carrying capacity of the filter structure must be considered when it is located under parking lots, driveways, roadways, and, certain sidewalks (such as those adjacent to State highways). Traffic intensity may also be a factor. The structure must be designed by a licensed structural engineer and the structural plans require approval by the plan approving jurisdiction.

Design Storm

The inlet design or integral large storm bypass must be adequate for isolating the WQV from the design storm for the receiving storm sewer system (usually the 10 year storm) and for conveying the peak flow of that storm past the filter system. Since D.C. Sand Filters will be used only as off-line facilities in Virginia, the interior hydraulics of the filter are not as critical as when used as an on-line facility. The system should draw down in approximately 40 hours.

Infrastructure Elevations

For cost considerations, it is preferable that D.C. Sand Filters work by gravity flow. This requires sufficient vertical clearance between the invert of the prospective inflow storm piping and the invert of the storm sewer which will receive the outflow. In cases where gravity flow is not possible, a clearwell sump and pump are required to discharge the effluent into storm sewer. Such an application would be appropriate in commercial or industrial situations where a dedicated maintenance force will be available (shopping malls, apartment houses, factories of other industrial complexes, etc.).

Accessibility and Headroom for Maintenance

Both the sedimentation basin and the filter must be accessible to approriate equipment and vacuum trucks for removing accumulated sediments and trash. The sedimentation basin must be cleaned approximately once per year, and the filter will likely need raking on that frequency to remove trash and restore permeability. When filters are placed in underground vaults, all three chambers must have personnel access manholes and built-in access ladders. **A minimum headspace of 60 inches above the filter is required to allow such maintenance and repair.** A 38-inch diameter maintenance manhole with eccentric nested covers (a 22-inch personnel access lid inside the 38-inch diameter lid) or a rectangular load bearing access door (minimum 4 ft. x 4 ft.) should be positioned directly over the center of the filter.

Construction Specifications

Figure 3.12A-2 is a cross-section of the filter chamber.

FIGURE 3.12A - 2
D.C. Sand Filter Cross-Section

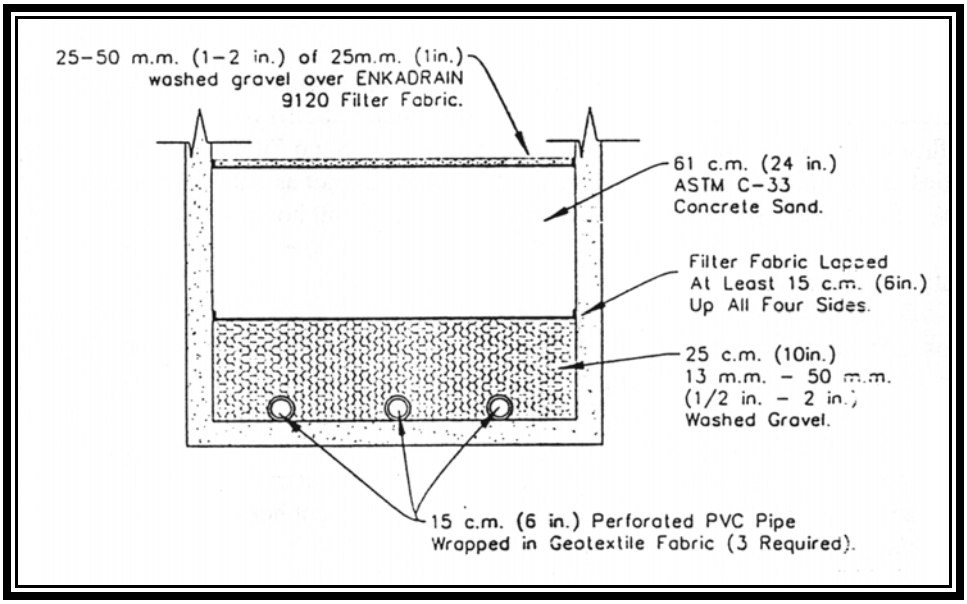

Depth of Sedimantation Pool

The sedimentation "plunge pool" must be at least 36 inches deep to properly remove sediment and absorb energy from the incoming flow.

Depth of the Underwater Opening Between Chambers

To preserve an effective hydrocarbon trap, the top of the underwater opening between chambers must be at least 18 inches below the depth of the weir which divides the filter from the pool. To retain sediment in the first chamber, the bottom of the opening should be at least six inches above the floor. The area of the opening should be at least 1.5 times the cross-sectional area of the inflow pipe(s) to assure that the water level remains equal between the first and second chambers.

Total Depth of Filter Cross-Section

The total depth of the filter cross-section must match the height of the weir dividing the sedimentation pool from the filter. Otherwise, a "waterfall" effect will develop which will gouge out the front of the filter media. If a sand filter less than 24 inches is used, the gravel layer must be increased accordingly to preserve the overall filter depth.

Upper Aggregate Layer

The washed aggregate or gravel layer at the top of the filter shall be at least one inch thick and meet ASTM standard specifications (1-inch maximum diameter).

Geotextile Fabrics

The filter cloth layer beneath the upper aggregate layer shall be reinforced by an HDPE or PVC geomatrix (such as ENKADRAIN 9120) and meet the specifications shown in **Table 3.12C-1**. The filter fabric between the sand layer and the collector gravel shall conform to the specifications in **Table 3.12A-2**. The fabric rolls must be cut with sufficient dimensions to cover the entire wetted perimeter of the filtering area and lap up the filter walls at least six-inches.

Sand Filter Layer

For applications in Virginia, use **ASTM C33 Concrete Sand** or sand meeting the Grade A fine aggregate gradation standards of Section 202 of the VDOT ***Road and Bridge Specifications.*** The top of the sand filter must be completely level.

TABLE 3.12A - 1
Specifications for Nonwoven Geotextile Fabric on Top of D.C. Sand Filter

Property	Test Method	Unit	Specification
Unit Weight	ASTM D-1777	Oz./Sq.yd.	4.3 (minimum)
Flow Rate	Falling Head Test	Gpm/Sq.ft.	120 (minimum)
Puncture Strength	ASTM D-751 (Modified)	Lb.	60 (minimum)
Thickness	--	In.	0.08 (minimum)

Table 3.12A - 2
Specifications for Nonwoven Geotextile Fabric Beneath Sand in D.C. Filter

Property	Test Method	Unit	Specification
Unit Weight	--	Oz./sq.yd.	8.0 (min.)
Filtration Rate	--	In/sec	0.08 (min.)
Puncture Strength	ASTM D-751 (Modified)	Lb.	125 (min.)
Mullen Burst Strength	ASTM D-751	Psi	400 (min.)
Equiv. Opening Size	U.S. Standard Sieve	No.	80 (min.)
Tensile Strength	ASTM D-1682	Lb.	300 (min.)

Gravel Bed Around Collector Pipes

The gravel layer surrounding the collector pipes shall be ½ to two (2) inch diameter gravel and provide at least two (2) inches of cover over the tops of the drainage pipes.

Underdrain Piping

The underdrain piping consists of three 6-inch schedule 40 or better polyvinyl perforated pipes reinforced to withstand the weight of the overburden. Perforations should be 3/8 inch, and each row of perforations shall contain at least six (6) holes. Maximum spacing between rows of perforations shall be six (6) inches.

The minimum grade of piping shall be 1/8 inch per foot (one [1] percent slope). Access for cleaning all underdrain piping is needed. Clean-outs for each pipe shall extend at least six (6) inches above the top of the upper filter surface, e.g. the top layer of gravel.

Each pipe shall be thoroughly wrapped with 8 oz./sq.yd. geotextile fabric meeting the specification in **Table 3.12A-2** above.

Dewatering Drain

When the filter is placed in an underground vault, A 6-inch dewatering drain controlled by a gate valve shall be installed between the filter chamber and the clearwell chamber with its invert at the elevation of the top of the filter. The dewatering drain penetration in the chamber dividing wall shall be sealed with a flexible strip joint sealant which swells in contact with water to form a tight pressure seal.

Access Manholes

When the filter is installed in an underground vault, access to the headbox (sediment chamber) and the clearwell shall be provided through at least 22-inch manholes. Access to the filter chamber shall be provided by a rectangular dood (minimum size: 4 feet by four feet) of sufficient strength to carry prospective imposed loads or by a manhole of at least 3- inch diameter with an offset concentric 22-inch lid (Neenah R-1741-D or equivalent).

Protection from Construction Sediments

The site erosion and sediment control plan must be configured to permit construction of the filter system while maintaining erosion and sediment control.

No runoff is to enter the sand filtration system prior to completion of all construction and site revegitation. Construction runoff shall be treated in separate sedimentation basins and routed to by-pass the filter system. Should construction runoff enter the filter system prior to site revegitation, all contaminated materials must be removed and replaced with new clean materials.

Watertight Integrity Test

After completion of the filter shell but before placement of the filter layers, entrances to the structure shall be plugged and the shell completely filled with water to demonstrate water tightness. Maximum allowable leakage is 5 percent of the filter shell volume in 24 hours. Should the structure fail this test, it shall be made watertight and successfully retested prior to placement of the filter layers.

Hydraulic Compaction of Filter Components

After placement of the collector pipes, gravel, and lower geotextile layer, fill the shell with filter sand to the level of the top of the sediment pool weir. Direct clean water into the sediment chamber until both the sediment chamber and filter chamber are completely full. Allow the water to draw down until flow from the collector pipes ceases, hydraulically compacting the filter sand. After allowing the sand to dry out for a minimum of 48 hours, refill the shell with sand to a level one inch

beneath the top of the weir and place the upper geotextile layer and gravel ballast.

Portland Cement Concrete

Concrete liners may be used for sedimentation chambers and for sedimentation and filtration basins. Concrete shall be at least five (5) inch thick Class A3 defined in the Virginia Department of Transportation *Road and Bridge Specifications.*

Maintenance/Inspection Guidelines

The following maintenance and inspection guidelines are not intended to be all inclusive. Specific facilities may require other measures not discussed here.

Inspection Schedule

The water level in the filter chamber shall be monitored by the owner on a quarterly basis and after every large storm for the first year after completion of construction and a log shall be maintained of the results indicating the rate of dewatering after each storm and the water depth for each observation. Once the governing jurisdiction staff indicates that satisfactory performance of the structure has been demonstrated, the monitoring schedule can be reduced to an semiannual basis.

The BMP shall be inspected annually by representatives of the owner and the governing jurisdiction to assure continued proper functioning.

Sediment Chamber Pumpout

The sediment chamber must be pumped out halfway through the inspection cycle (e.g. after six months) and after each joint owner-governing jurisdiction annual inspection. If the chamber contains an oil skim, it should be removed by a firm specializing in oil recovery and recycling. The remaining material may then be removed by vacuum pump and disposed of in an appropriate landfill. **After each cleaning, refill the first chamber to a depth of three feet with clean water to reestablish the water seals**.

When the filter will no longer draw down within the required 40-hour period, the top layer of filter cloth and ballast gravel must be removed and replaced with new materials conforming to the original specifications. Any discolored or sediment contaminated sand shall also be removed and replaced.

Design Procedures

The following design procedure is structured to assure that the desired water quality volume is captured and treated by the D.C.Sand Filter. The procedure assumes that a filter shell with a rectangular cross-section is to be used.

Figure 3.12A-3 shows the dimensional relationships for a D.C. Sand Filter.

FIGURE 3.12A - 3
Dimensional Relationships for a D.C. Sand Filter

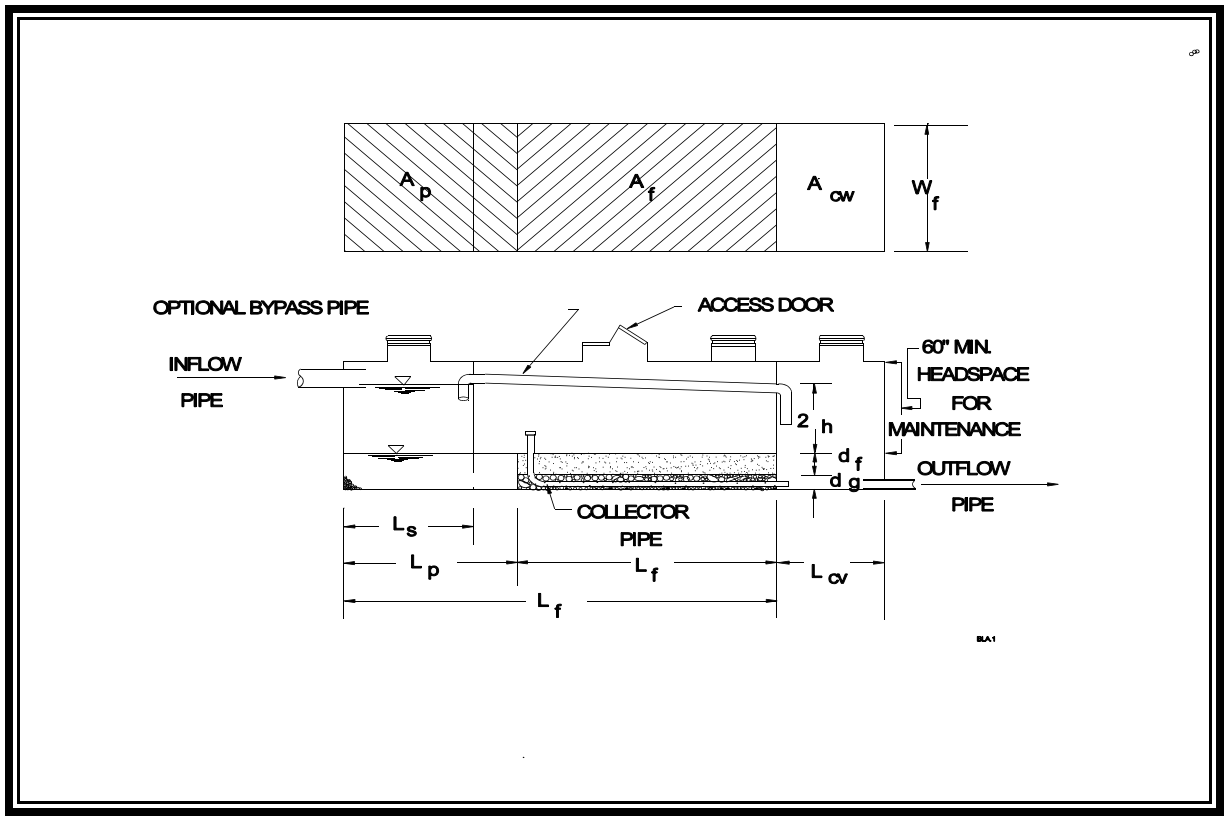

Standard Design Logic

Employ the following design logic to design D.C. Sand Filters for use in Virginia:

1. Determine Governing Site Parameters

Determine the Impervious area on the site (I_a in acres), the water quality volume to be treated (WQV in $ft.^3 = 1816\ I_a$), and the site parameters necessary to establish 2h, the maximum ponding depth over the filter (storm sewer invert at proposed connection point, elevation to inflow invert to BMP, etc).

2. Select Filter Depth and Determine Maximum Ponding Depth

Considering the data from Step 1) above, select the Filter Depth ((d_f) and determine the maximum achievable ponding depth over the filter (2h).

3. Compute the Minimum Area of the Sand Filter (A_{fm})

To compute the area of the filter, use the formula:

$$A_{fmPS} = \frac{545 I_a d_f}{(h + d_f)}$$

A_{fm} = minimum surface area of sand bed (square feet)
I_a = impervious cover on the watershed in acres
d_f = sand bed depth (normally 1.5 to 2ft)
h = average depth of water above surface of sand media between full and empty basin conditions (ft.)

4. Select Filter Width and Compute Filter Length and Adjusted Filter Area

Considering site constraints, select the Filter Width (W_f). Then compute the Filter Length (L_f) and the Adjusted Filter Area (A_f)

$$L_f = A_{fm}/W_f$$

$$A_f = W_f \times L_f$$

Note: From this point forward, computations assume a rectangular filter.

5. Compute the Storage Volume on Top of the Filter (V_{Tf})

$$V_{Tf} = A_f \times 2h$$

6. Compute the Storage in the Filter Voids (V_v)
   (Assume 40% voids in filter media)

$$V_v = 0.4 \times A_f \times (d_f + d_g)$$

7. Compute Flow Through Filter During Filling (V_Q)
   (Assume 1-hour to fill per D.C. practice)

$$V_Q = \frac{kA_f(d_f + h)}{d_f} \text{ ; use } k = 2 \text{ ft./day} = 0.0833\text{/hr.}$$

8. Compute Net Volume to be Stored Awaiting Filtration (V_{st})

$$V_{st} = WQV - V_{Tf} - V_v - V_Q$$

9. Compute Length of the Permanent Pool (Lpm)

$$Lpm \quad \frac{V_{st}}{(2h \times W_f)}$$

10. Compute Minimum Length of the Sediment Chamber (Lsc)
    (to contain 20% of WQV per Austin practice)

$$L_{sm} = \frac{0.2WQV}{(2h \times W_f)}$$

11. Set Final Length of the Permanent Pool (L_p)

If $L_{pm} \geq L_{sm} + 2$ ft., make $L_p = L_{pm}$

If $L_{pm} < L_{sm} + 2$ ft., make $L_p = L_{sm + 2 \text{ ft.}}$

It may be economical to adjust final dimensions to correspond with standard precast structures or to round off to simplify measurements during construction.

Set the length of the clearwell (L_{cw}) for adequate maintenance and/or access for monitoring flow rate and chemical composition of the effluent (minimum = 3 ft.)

<u>Minimizing Filter Shell Costs</u>

Underground vault sand filter costs have been widely varying because many developers have simply had their foundation contractors cast the vault in place. Each installation therefore became a prototype with associated costs and overhead. Precast manufacturers currently offer precasting services for D.C. and other types of sand filter vaults, which should stabilize underground vault costs. **Figure 3.12A-4** is a photograph of a segmented precast filter shell installation in Alexandria.

FIGURE 3.12A - 4
Installing Precast D.C. Sand Filter Shell in Alexandria

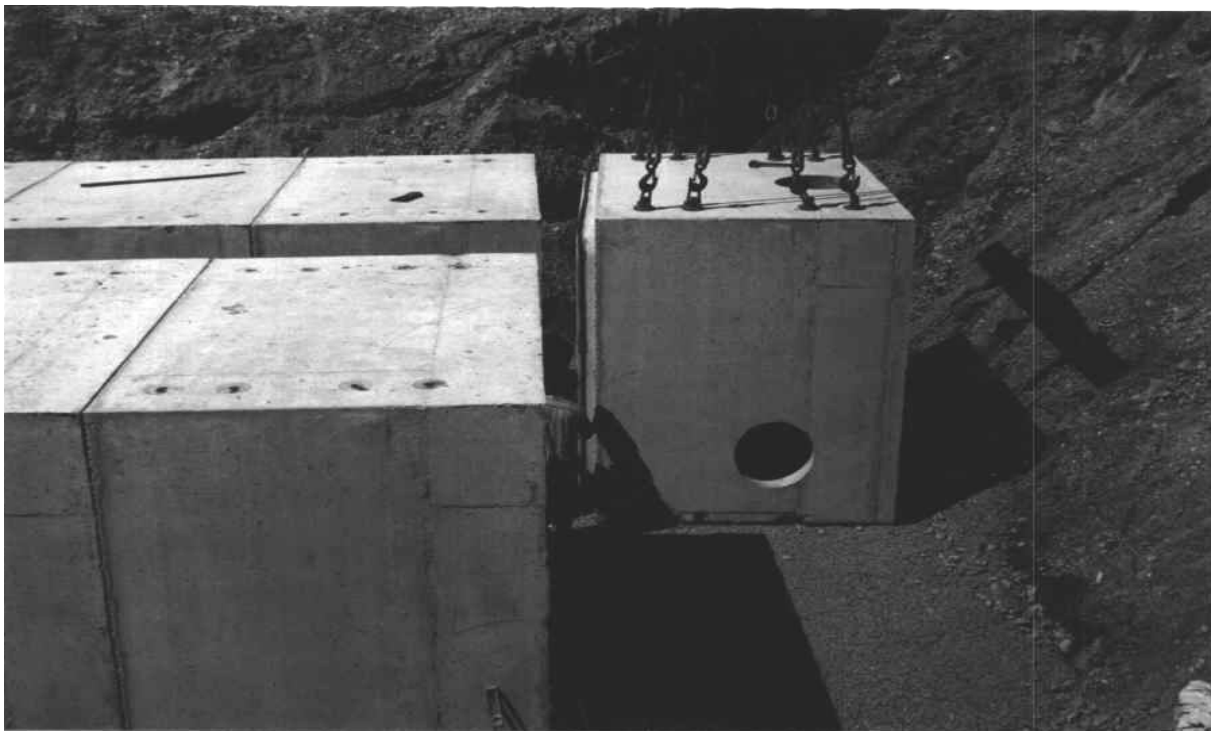

(Photo Courtesy of Rotondo Precast, Fredericksburg, Virginia)

Checklists

Worksheet 3.12A is for use in sizing calculations for D.C. Sand Filters. The **Construction Inspection and As-Built Survey Checklist** found in **Appendix 3D** is for use in inspecting intermittent sand filter facilities during construction and, where required by the local jurisdiction, engineering certification of the filter construction. The **Operation and Maintenance Checklist**, also found in **Appendix 3D**, is for use in conducting maintenance inspections of intermittent sand filter facilities.

FIGURE 3.12A - 5
D.C. Filter Cross-Section with HDPE Infiltration Chamber Collector System

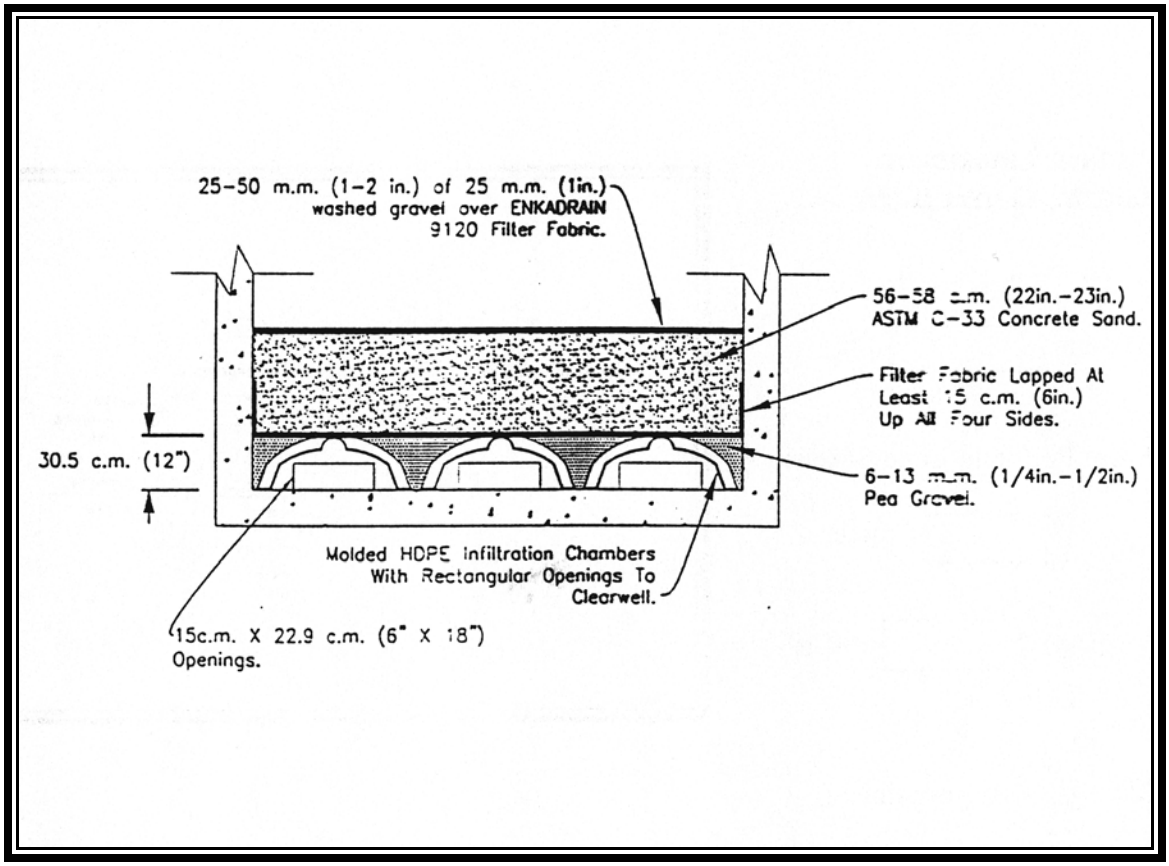

WORKSHEET 3.12A
SIZING COMPUTATIONS FOR D.C. UNDERGROUND VAULT SAND FILTER

Page 1 of 4

Part 1: Select maximum ponding depth over filter:

2h = _____ ft;

h = [ ] ft

From Pollutant Load Sheets:

I_a = [ ] acres

WQV = [ ] ft^3

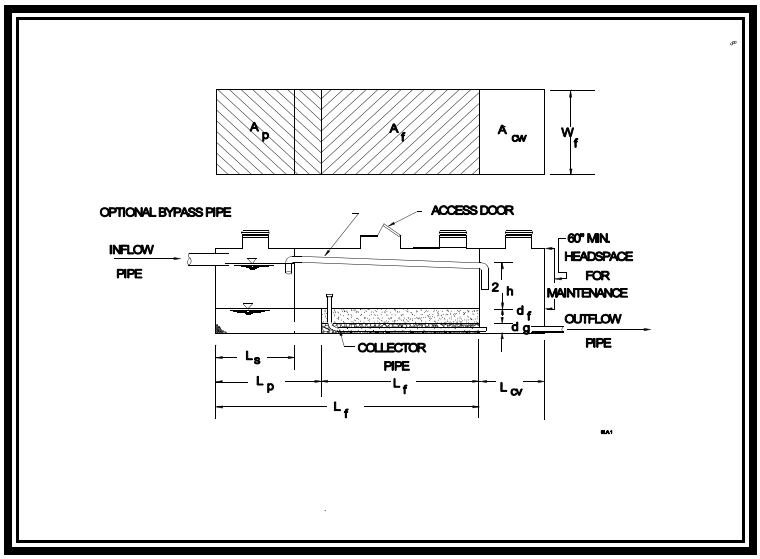

Outflow by gravity possible ___

Effluent pump required __

Part 2: Compute Minimum Area of Filter (A_{fm}):

$$A_{fm} = \frac{545 I_a d_f}{(d_f + h)}$$

= [545 x _____ x _____] / [_____ + _____]

= [ ] ft^2

Part3: Considering Site Constraints, Select Filter Width (W_f) and Compute Filter Length (L_f) and Adjusted Filter Area (A_f):

W_f = [ ] ft;

WORKSHEET 3.12A
SIZING COMPUTATIONS FOR D.C. UNDERGROUND VAULT SAND FILTER
Page 2 of 4

$L_f = A_{fm} / W_f$

= _____/_____

= _____, say [ ] ft

$A_f = W_f \times L_f$ = _____ x _____

= [ ] ft^2

Part 4: Compute the Storage Volume on Top of the Filter(V_{Tf})

$V_{Tf} = A_f \times 2h$ = _____x _____

= [ ] ft^3

Part 5: Compute Storage in Filter Voids (V_v):
(Assume 40% voids in filter media)

$V_v = 0.4 \times A_f \times (d_f + d_g)$

= 0.4 x _____ x (_____ + _____)

= [ ] ft^3

Part 6: Compute Flow Through Filter During Filling Period (V_Q):
(Assume 1-hour to fill per D.C. practice)

$V_Q = \frac{kA_f(d_f + h)}{d_f}$; use k = 2 ft/day = 0.0833 ft/hr

= [0.0833 x _____ x (_____ + _____)]/_____

= [ ] ft^3

WORKSHEET 3.12A
SIZING COMPUTATIONS FOR D.C. UNDERGROUND VAULT SAND FILTER
Page 3 of 4

Part 7: Compute Net Volume to be Stored Awaiting Filtration (V_{st}):

$V_{st} = WQV - V_{Tf} - V_v - V_Q$

= _____ - _____ - _____ - _____

= [ ] ft^3

Part 8: Compute Minimum Length of Permanent Pool (L_{pm}):

$L_{pm} = \frac{V_{st}}{(2h \times W_f)}$ = _____ / (_____ x _____)

= [ ] ft

Part 9: Compute Minimum Length of Sediment Chamber (L_{sm})
(to contain at least 20% of WQV per Austin practice)

$L_{sm} = \frac{0.2WQV}{(2h \times W_f)}$ = _____ /_____

= [ ] ft

Part 10: Set Final Length of Permanent Pool (L_p)

L_{sm} + 2ft = _____ + 2 = [ ] ft

If $L_{pm} \geq L_{sm}$ + 2ft, Make $L_p = L_{pm}$ [ ] = ft

If $L_{pm} < L_{sm}$ + 2ft, make $L_p = L_{sm}$ +2ft = [ ]

WORKSHEET 3.12A
SIZING COMPUTATIONS FOR D.C. UNDERGROUND VAULT SAND FILTER
Page 4 of 4

Part 11: Set Length of Clearwell (L_{cw}) for Adequate Maintenance Access (Minimum = 3 ft) and Compute Final Inside Length (L_{ti}):

L_{cw} = [ ] ft;

Sum of interior partition thicknesses (t_{pi}) = _____ ft

$L_{ti} = L_f + L_p + L_{cw} + t_{pi}$

= _____ + _____ + _____ + _____

= [ ] ft

Part 12: Design Effluent Pump if Required

Since pump must be capable of handling flow when filter is new, use k = 12 feet/day = 0.5 ft/hr

$$Q = \frac{kA_f(d_f + h)}{d_f}$$

= [0.5 x _____ x (_____ + _____)] /_____

= [ ] ft^3/hr ; /3600 = [ ] cfs;

x 448 = [ ] gpm

Part 13: Design Structural Shell to Accommodate Soil and Load conditions at Site:

It may be economical to adjust final dimensions upward to correspond with standard precast structures or to round dimensions upward to simplify layout during construction.

MINIMUM STANDARD 3.12B

DELAWARE SAND FILTER (DSF) SYSTEMS

Definition

Mr. Earl Shaver of the Delaware Department of Natural Resources and Environmental Control has developed a surface sand filter system for use in Delaware (Shaver and Baldwin, 1991)

As originally conceived, the Delaware Sand Filter is an **on-line** facility processing all stormwater exiting the treated site up to the point that its overflow limit is reached (Delaware provides for treating the first one inch of runoff). However, when employed in Virginia, it will usually be provided with an integral flow-splitter to isolate and treat the Water Quality Volume.

Figure 3.12B-1 shows a schematic drawing of the Delaware Sand Filter as used in Virginia. The system consists of two parallel concrete trenches connected by close-spaced wide notches in the wall dividing the trenches. The trench adjacent to the site being served is the sedimentation chamber. When accepting sheet flow, it is fitted with a grated cover. Concentrated stormwater may also be conveyed to the chamber in enclosed storm drain pipes. The second chamber, which contains the sand filter, is always fitted with a solid cover.

Storm flows enter the sedimentation chamber through the grates, causing the sedimentation pool to rise and overflow into the filter chamber through the weir notches in the dividing wall, assuring that the water to be treated **arrives at the filter as sheet flow**. This is essential to prevent scouring out the sand. The permanent pool in the sedimentation chamber is dead storage, which inhibits resuspension of particles that were deposited in earlier storms and prevents the heavier sediments from being washed into the filter chamber. Floatable materials and hydrocarbon films, however, may reach the filter media through the surface outflow.

The second trench contains at least 18 inches of ASTM C-33 Concrete Sand . When used in Virginia, an underdrain capability must be provided. Runoff percolates through the sand to the underdrain (s) and exits into the flow splitter/clearwell.

A transverse flow-splitter/clearwell at the lower end of the structure collects treated effluent and overflow and conveys the water to the storm sewer. When the filter shell fills with the Water Quality Volume, excess flow is forced through the underwater opening from the sedimentation chamber to the “wet” section of the clearwell to overflow the weir to the outflow pipe chamber. Floating trash and hydrocarbons are retained in the sedimentation chamber by this “trap.”

FIGURE 3.12B - 1
Precast Delaware Sand Filter as Used in Virginia

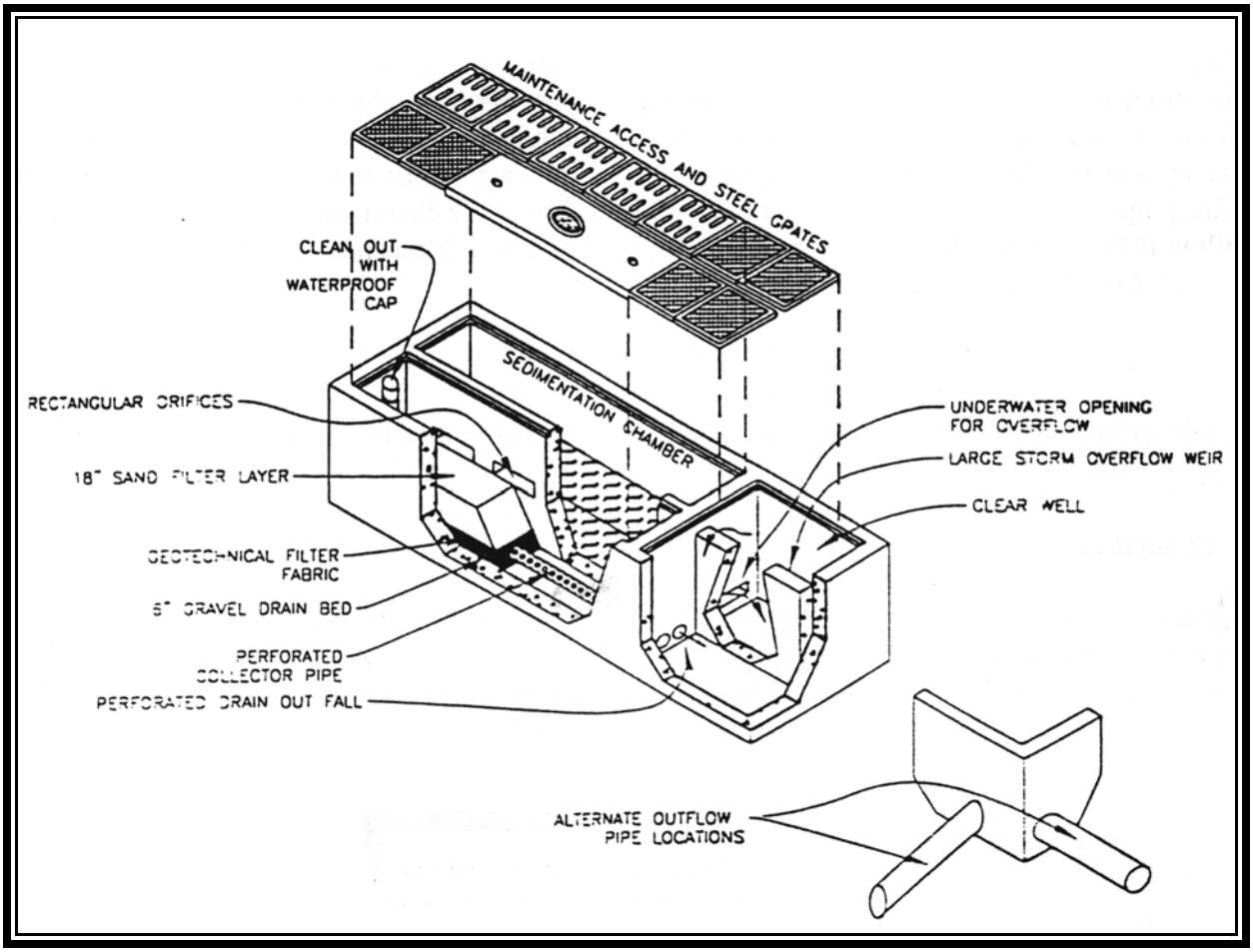

Purpose

Delaware Sand Filters primarily used for water quality control. However, they do provide detention and slow release of the water quality volume from the site being treated. Whether this amount will be sufficient to provide the necessary peak flow rate reductions required for channel erosion control is dependent upon site conditions (hydrology) and required discharge reductions. The 10-year and 100-year flows will usually exceed the detention capacity of a sand media filter. When this occurs, separate quantity must be provided.

Conditions Where Practice Applies

Delaware Sand Filters are ultra-urban BMPs best suited for use in situations where space is too constrained and/or real estate values are too high to allow the use of conventional retention ponds. A major advantage of the Delaware Sand Filter is that it can be installed in shallow configurations, which is especially critical in flatter regions where high water tables or shallow storm sewers exist. The simplicity of the system and the ready accessibility of the chambers for periodic maintenance allow it to be used where a filter built in confined space is unacceptable. Where possible, only runoff from impervious surfaces should be treated.

Drainage Area

Drainage areas served by one filter should be limited to approximately one acre. For larger drainage sheds, multiple DSFs may be used.

Development Conditions

Delaware Sand Filters are generally suitable BMPs for medium to high density commercial or industrial development. Because of confined space entry restrictions and maintenance requirements, they are not generally suitable for residential applications except for apartment complexes or large condominiums where a dedicated maintenance force will be present.

Planning Considerations

Refer to the **Planning Considerations** for **General Intermittent Sand Filter Practices, Minimum Standard 3.12,** previously discussed in this section. Of special concern are the stormwater infrastructure serving the site and the requirement to isolate the sand filter from receiving flows until the drainage shed is fully stabilized.

Potential and existing elevations of stormwater infrastructure serving the site will determine one of the most critical design parameters: the maximum depth to which runoff may be pooled over the filter and preserve a gravity flow configuration.

*Sand filter BMPS must **never** be placed in service until all site work has been completed and stabilization measures have been installed and are functioning properly.*

Design Criteria

The purpose of this section is to provide recommendations and minimum criteria for the design of Delaware Sand Filter BMPs intended to comply with the Virginia Stormwater Management program's runoff quality requirements.

Refer to the **General Design Criteria** previously discussed under **General Intermittent Sand Filter Practices, Minimum Standard 3.12**

Filter Sizing Criteria

Because of the shallow configuration of this BMP, resulting in low levels of hydraulic head above the filter, application of the usual partial sedimentation filter formula may not create enough storage volume to contain the WQV. With the dimensional relationships shown in **Figure 3.12B-2** and k = 2.0 ft/day, the required DSF filter area to contain the WQV may be written as follows:

$$A_f = \frac{1816 I_a}{(4.1h + 0.9)} = \frac{WQV}{(4.1h + 0.9)}$$

where:

A_f = the **area of the filter** in sq.ft.
I_a = the impervious area on the watershed in acres
h = 1/2 the maximum ponding depth over the filter (ft.)

If the maximum ponding depth above the filter (2h) is less than 2.67 feet (2'-8"), the WQV storage requirement governs and the above foumula must be used to size the filter (Alexandria, 1992). If the the maximum ponding depth above the filter (2h) is 2.67 feet or greater, use the partial sedimentation filter formula:

$$A_f = \frac{545 I_a d_f}{(h + d_f)}$$

Where d_f = depth of the filter media in ft. (1.5-2.0)

Delaware and Virginia make the area of the sediment chamber(A_s) equal the area of the filter:

$$A_f = A_s$$

FIGURE 3.12B- 2
Dimensional Relationships for Delaware Sand Filter

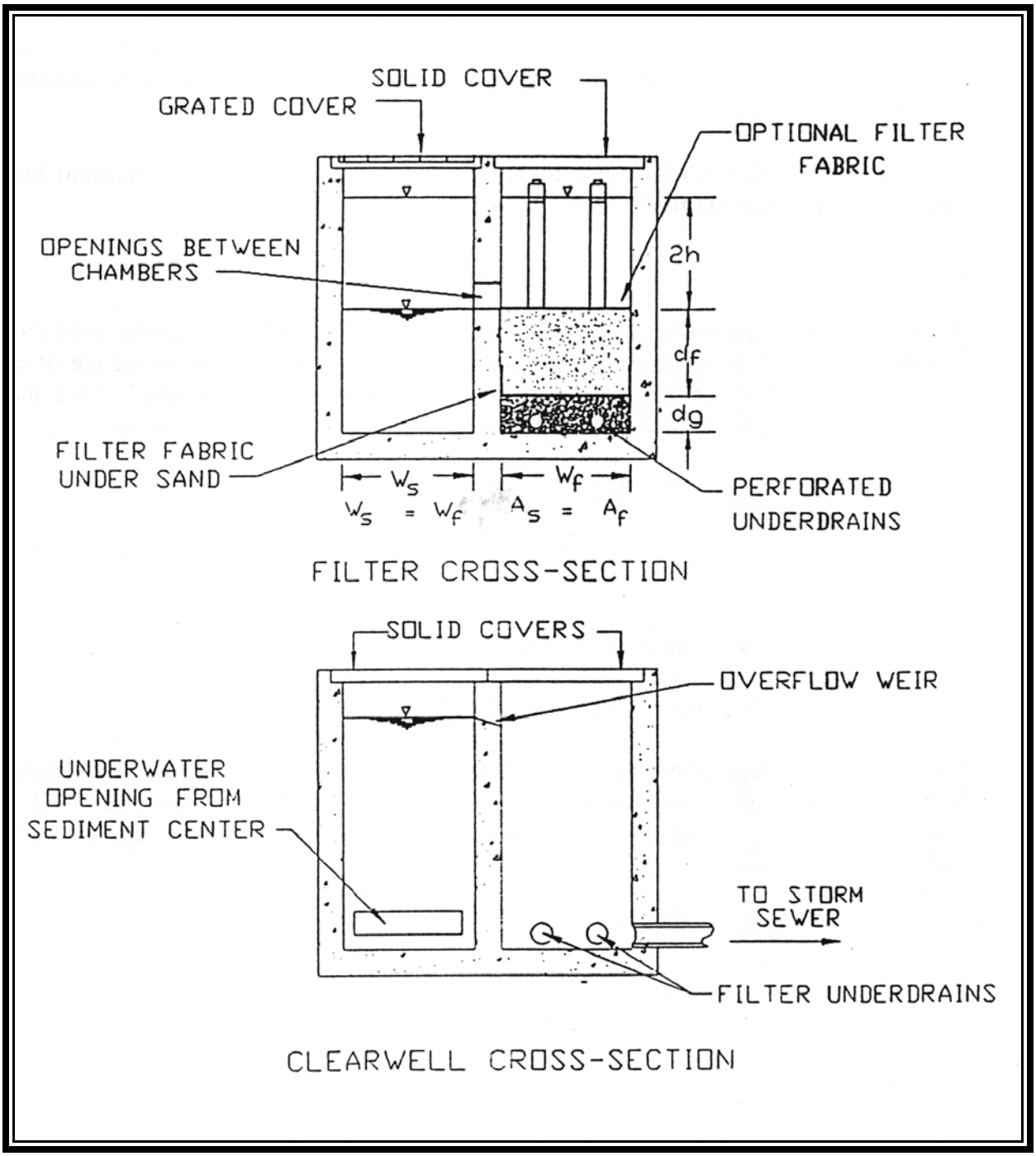

Structural Requirements

When the system is placed in a street or parking lot, it must be designed to support traffic wheel loads. When placed completely off the pavement, lower structural loads will be involved. The structure must be designed by a licensed professional engineer, and the design must be approved by the governing jurisdiction.

Design Storm

The inlet integral large storm bypass must be adequate for isolating the WQV from the design storm for the receiving storm sewer system (usually the 10 year storm) and for conveying the peak flow of that storm past the filter system. The system should draw down in approximately 40 hours.

Infrastructure Elevations

For cost considerations, it is preferable that Delaware Sand Filters work by gravity flow. This requires sufficient vertical clearance between the invert of the prospective inflow storm piping and the invert of the storm sewer which will receive the outflow. In cases where gravity flow is not possible, a clearwell sump and pump are required to discharge the effluent into storm sewer. Such an application would be appropriate in commercial or industrial situations where a dedicated maintenance force will be available (shopping malls, apartment houses, factories of other industrial complexes, etc.).

Construction Specifications

Upper Aggregate Layer

Some jurisdictions require a layer of filter cloth and gravel on top of the filter. When used, the washed aggregate or gravel layer at the top of the filter shall be one inch thick and meet ASTM standard specifications (1 inch maximum diameter.)

Geotextile Fabrics

When used, the filter fabric beneath the one-inch layer of gravel on top of the filter shall be Enkadrain 9120 filter fabric or equivalent with the specifications shown in **Table 3.12B - 1**.

Table 3.12B - 1
Specifications for Nonwoven Geotextile Fabric on Top of Delaware Sand Filter

Property	Test Method	Unit	Specification
Unit Weight	ASTM D-1777	Oz./sq.yd.	4.3 (min.)
Flow Rate	Falling Head Test	Gpm/sq.ft.	120 (min.)
Puncture Strength	ASTM D-751 (Modified)	Lb.	60 (min.)
Thickness	--	In.	0.8 (min.)

In instances where heavy hydrocarbon loadings are expected, a layer of activated carbon impregnated filter fabric such as Enkadrain PF-3 may be advantageous. When used, a plan to dispose of the hydrocarbon laden used filter fabric must be approved by the applicable jurisdiction prior to placing the sand filter in service.

The filter cloth layer beneath the sand shall conform to the specifications shown in **Table 3.12B-2**.

Table 3.12B - 2
Specifications for Nonwoven Geotextile Fabric Beneath Sand in Delaware Sand Filter

Property	Test Method	Unit	Specification
Unit Weight	--	Oz./sq.yd.	8.0 (min.)
Filtration Rate	--	In/sec	0.08 (min.)
Puncture Strength	ASTM D-751 (Modified)	Lb.	125 (min.)
Mullen Burst Strength	ASTM D-751	Psi	400 (min.)
Equiv. Opening Size	U.S. Standard Sieve	No.	80 (min.)
Tensile Strength	ASTM D-1682	Lb.	300 (min.)

The fabric rolls must be cut with sufficient dimensions to cover the entire wetted perimeter of the filtering area and lap up the filter walls at least six-inches.

Sand Filter Layer

For applications in Virginia, use **ASTM C33 Concrete Sand.** The top of the sand filter must be completely level. No grade is allowable.

Gravel Bed Around Collector Pipes

The gravel layer surrounding the collector pipes shall be ½ to two (2) inch diameter gravel and provide at least two (2) inches of cover over the tops of the drainage pipes. The gravel and the sand layer above must be separated by a layer of geotextile fabric meeting the specification listed above.

Underdrain Piping

When round perforated pipes are used, the underdrain piping shall consist of a minimum of two (2) schedule 40 or better four (4) inch polyvinyl perforated pipes reinforced to withstand the weight of the overburden. Perforations shall be 3/8 inch, and each row of perforations shall contain at least four (4) holes. Maximum spacing between rows of perforations shall be six (6) inches.

The minimum grade of piping shall be 1/8 inch per foot (one [1] percent slope). Access for cleaning all underdrain piping is needed. Clean-outs for each pipe shall extend at least six (6) inches above the top of the upper filter surface.

Each pipe shall be thoroughly wrapped with 8 oz./sq.yd. geotextile fabric meeting the specification in **Table 3.12B - 2** above.

Alternative Underdrains

Shallow rectangular drain tiles may be fabricated from such materials as fiberglass structural channels, saving several inches of filter depth. Drain tiles shall normally be in two-foot lengths and spaced to provide gaps 1/8-inch less than the smallest gravel sizes on all four sides. Sections of tile may be cast in the dividing wall between the filter and the clearwell to provide shallow outflow oricices. Flat perforated drainage piping such as AdvantEdge® may also be used to reduce the depth of filter. Another approach is to raise a grate on small masonary units above the floor of the shell, lay a layer of PVC or polyethelene geomatrix on the grate to spread the load, and install the filter cloth and sand above this matting; molded HDPE infiltration chambers may also be used as shown in **Figure 3.12A-5.** The entire bottom of the filter shell thus becomes a collector channel. When the shell bottom is so used, it shall have a minimum slope of 1/8 inch per foot (1%).

Weepholes

In addition to the underdrain pipes, weepholes may be installed between the filter chamber and the clearwell to provide relief in case of pipe clogging. The weepholes shall be three (3) inches in diameter. Minimum spacing shall be nine (9) inches center to center. The openings on the filter side of the dividing wall shall be covered to the width of the trench with 12 inch high plastic hardware cloth of 1/4 inch mesh or galvanized steel wire, minimum wire diameter 0.03-inch, number 4 mesh hardware cloth anchored firmly to the dividing wall structure and folded a minimum of 6 inches back under the bottom stone.

Protection from Construction Sediments

The site erosion and sediment control plan must be configured to permit construction of the filter

system while maintaining erosion and sediment control.

No runoff is to enter the sand filtration system prior to completion of all construction and site revegitation. Construction runoff shall be treated in separate sedimentation basins and routed to by-pass the filter system. Should construction runoff enter the filter system prior to site revegitation, all contaminated materials must be removed and replaced with new clean materials.

Watertight Integrity Test

After completion of the filter shell but before placement of the filter layers, entrances to the structure shall be plugged and the shell completely filled with water to demonstrate water tightness. Maximum allowable leakage is 5 percent of the filter shell volume in 24 hours. Should the structure fail this test, it shall be made watertight and successfully retested prior to placement of the filter layers.

Hydraulic Compaction of Filter Components

After placement of the collector pipes, gravel, and lower geotextile layer, fill the shell with filter sand to the level of the top of the sediment pool weir. Direct clean water into the sediment chamber until both the sediment chamber and filter chamber are completely full. Allow the water to draw down until flow from the collector pipes ceases, hydraulically compacting the filter sand. After allowing the sand to dry out for a minimum of 48 hours, refill the shell with sand to a level one inch beneath the top of the weir and place the upper geotextile layer and gravel ballast.

Grates and Covers

When placed in traffic lanes, grates and covers must withstand H-20 wheelloadings. Use of standard Virginia Department of Transportation (VDOT) grates (Grate D1-1) will often be most cost-effective. Where allowed by local jurisdictions, galvanized steel bar grates are economical.

Portland Cement Concrete

Portland Cement concrete used for the trench structure shall conform to the A3 specification of the Virginia Department of Transportation ***Road and Bridge Specifications***, latest edition.

Maintenance/Inspection Guidelines

The following maintenance and inspection guidelines are not intended to be all inclusive. Specific facilities may require other measures not discussed here.

Inspection Schedule

During the first year of operation, the cover grates or precast lids on the chambers must be removed

quarterly and a joint owner-jurisdiction inspection made to assure that the system is functioning. Once the jurisdiction inspectors are satisfied that the system is functioning properly, this inspection may be made on an annual basis for other than auto-related activities.

Sediment Chamber Pumpout

The sediment chamber must be pumped out when the joint owner-jurisdiction determines that . If the chamber contains an oil skim, it should be removed by a firm specializing in oil recovery and recycling. The remaining material may then be removed by vacuum pump and disposed of in an appropriate landfill. **After each cleaning, refill the first chamber with clean water to reestablish the water seals to the clearwell.**

Sand Filter

When deposition of sediments in the filtration chamber indicate that the filter media is clogging and not performing properly, sediments must be removed (a small shovel may be all that is necessary) along with the top two to three inches of sand. The coloration of the sand will provide a good indication of what depth of removal is required. Clean sand must then be placed in the filter to restore the design depth. Where a layer of geotechnical fabric overlays the filter, the fabric shall be rolled up and removed and a similar layer of clean fabric installed. Any discolored sand shall also be removed and replaced. Disposal of petroleum hydrocarbon contaminated sand or filter cloth should be coordinated with the appropriate environmental official of the local jurisdiction. On filters which employ an upper geotextile layer and ballast, the top layer of filter cloth and ballast gravel must be removed and replaced with new materials conforming to the original specifications when the filter will no longer draw down within the required 40-hour period. Any discolored or sediment contaminated sand shall also be removed and replaced with sand meeting the original specifications (ASTM C-33 Concrete Sand).

Concrete Shell Inspection

Concrete will deteriorate over time, especially if subjected to live loads. The concrete shell, risers, etc., must be examined during each annual inspection to identify areas that are in need of repair, and such repairs must be promptly effected.

Grass Clippings

Grass clippings from landscape areas on the drainage watershed flowing into the DSF must be bagged and removed from the site to prevent them washing into and contaminating the sediment chamber and filter.

Trash Collection

Trash collected on the grates protecting the inlets shall be removed no less frequently than weekly to assure preserving the inflow capacity of the BMP.

Design Procedures

The following design procedure is structured to assure that the desired water quality volume is captured and treated by the Delaware Sand Filter. The procedure assumes that a filter shell with a rectangular cross-section is to be used. **Figure 3.12B-2** shows the dimensional relationships required to compute the design.

Standard Design Logic

Employ the following design logic to design Delaware Sand Filters for use in Virginia:

1. Determine Governing Site Parameters

Determine the Impervious area on the site (I_a in acres), the water quality volume to be treated (WQV in $ft.^3 = 1816\ I_a$), and the site parameters necessary to establish 2h, the maximum ponding depth over the filter (storm sewer invert at proposed connection point, elevation to inflow invert to BMP, etc).

2. Select Filter Depth and Determine Maximum Ponding Depth

Considering the data from Step 1) above, select the Filter Depth ((d_f) and determine the maximum achievable ponding depth over the filter (2h).

3. Calculate the Required Surface Areas of the Chambers

If the maximum ponding depth above the filter (2h) is less than 2.67 feet (2'-8"), the WQV storage requirement governs and the above foumula must be used:

$$A_f = \frac{1816 I_a}{(4.1h + 0.9)} = \frac{WQV}{(4.1h + 0.9)}$$

where:

A_f = the **area of the filter** in sq.ft.

I_a = the impervious area on the watershed in acres

h = 1/2 the maximum ponding depth over the filter (ft.)

If the the maximum ponding depth above the filter (2h) is 2.67 feet or greater, use the partial sedimentation filter formula:

$$A_f = \frac{545 I_a d_f}{(h + d_f)}$$

where:

d_f = depth of the filter media in ft. (1.5-2.0)

Delaware and Virginia make the area of the filter equal the area of the sediment chamber:

$$A_f = A_s$$

4. Establish Dimensions of the Facility

Site considerations usually dictate the final dimensions of the facility. Sediment trenches and filter trenches normally be 18-30 inches wide. Use of standard VDOT D1-1 grates requires a trench width of 26". Some jurisdictions restrict the maximum allowable trench width to 36 inches.

Minimizing Filter Shell Costs

Underground vault sand filter costs have been widely varying because many developers have simply had their foundation contractors cast the vault in place. Each installation therefore became a prototype with associated costs and overhead. Precast manufacturers currently offer precasting services for D.C. and other types of sand filter vaults, which should stabilize underground vault costs. **Figure 3.12B3** is a photograph of a segmented precast shell installation in Alexandria.

FIGURE 3.12B - 3
Installing Precast Delaware Sand Filter Shell in Alexandria, Virginia

(Photo Courtesy of Rotondo Precast, Fredericksburg, Virginia)

Checklists

Worksheet 3.12B is for use in sizing calculations for Delaware Sand Filters. The **Construction Inspection and As-Built Survey Checklist** found in **Appendix 3D** is for use in inspecting intermittent sand filter facilities during construction and, where required by the local jurisdiction, engineering certification of the filter construction. The **Operation and Maintenance Checklist**, also found in **Appendix 3D**, is for use in conducting maintenance inspections of intermittent sand filter facilities.

WORKSHEET 3.12B
SIZING COMPUTATIONS FOR STANDARD DELAWARE SAND FILTER
Page 1 of 2

Part 1: Select maximum ponding depth over filter:

2h = _____ft;

h = [ ] ft

From Pollutant Load Sheets:

I_a = [ ] acres

WQV = [ ] ft^3

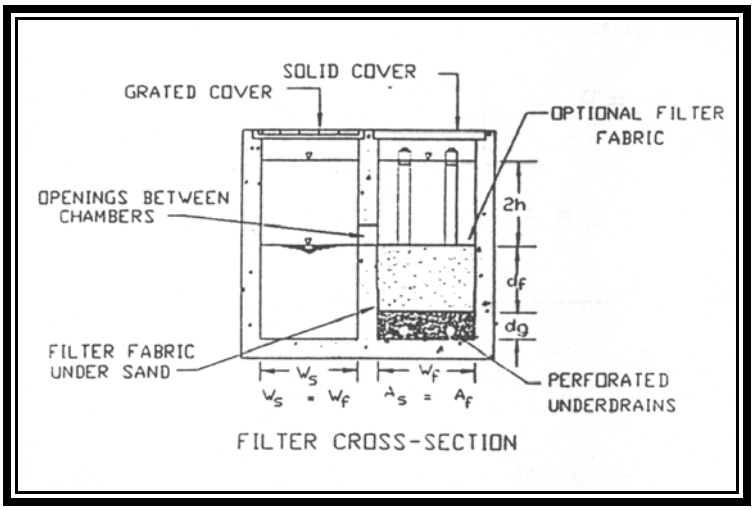

Outflow by gravity possible____; Effluent pump required _____

Part 2: Compute Minimum Area of Filter (A_{fm}) and Sediment Pool (A_{sm}):

a) If 2h ≥ 2.67 feet, use the formula:

$$A_{sm} = A_{fm} = \frac{545 I_a d_f}{(d_f + h)}$$

= [545 x _____ x _____] / [_____ + _____]

= [ ] ft^2

b) If 2h < 2.67 feet, use the formula:

$$A_{sm} = A_{fm} = \frac{1816\ I_a}{(4.1h + 0.9)} = \frac{WQV}{(4.1h + 0.9)}$$

= _____ / [(4.1 x _____) + 0.9]

= [ ] ft^2

WORKSHEET 3.12B
SIZING COMPUTATIONS FOR STANDARD DELAWARE SAND FILTER
Page 2 of 2

Part 3: Considering Site Constraints, Select Filter Width (W_f) and Sediment Pool Width (W_s) and Compute Filter Length (L_f) and Adjusted Filter Area (A_f) and Sediment Chamber Area (A_s):

$W_s = W_f =$ [ ] ft;

$L_s = L_f = A_{fm} / W_f$

= _____ /_____

= _____, [ ] say ft

$A_s = A_f = W_f \times L_f =$ _____ x _____

= [ ] ft^2

Part 4: Design Structural Shell to accommodate Soil and Load Conditions at Site:

(Separate computations by a structural engineer).

Part 5: Design Effluent Pump if Required:

Since pump must be capable of handling flow when filter is new, use k = 12 feet/day = 0.5 ft/hr

$$Q = \frac{kA_f(d_f + h)}{d_f}$$

= [0.5 x _____ x (_____ + _____)]/_____

= [ ] ft^3/hr ; /3600 [ ] = cfs;

x 448 = [ ] gpm

MINIMUM STANDARD 3.12C

AUSTIN SURFACE SAND FILTER SYSTEMS

Definition

The City of Austin, Texas, hase been using open basin intermittent sand filtration BMPs for treating stormwater runoff since the early 1980's. The Austin program is managed by the Environmental and Conservation Services Department, which has published design criteria in their *Environmental Criteria Manual* (Austin, 1988). Austin places heavy emphasis on pretreating the stormwater runoff in a sediment trapping presettling basin to protect the filter media from excessive sediment loading. The particles selected by Austin for complete removal in the full sedimentation protection basins are those which are greater than or equal in size to silt with a particle diameter of 0.00007 foot (20 microns) and a specific gravity of 2.65.

Figure 3.12C-1 illustrates an Austin Full Sedimantation Sand Filter application at a shopping center. In this system the sedimentation structure is a concrete basin designed to hold the entire WQV and then release it to the filtration basin over a 24-hour draw-down period. **Figure 3.12C-2** shows an alternative design which allows a smaller sedimentation chamber (20 percent of the WQV) while increasing the filter size to compensate for increased clogging of the filter media. Although the systems shown utilize concrete basins, a sediment pond and a geomembrane-lined filter built directly into he ground may be used where terrain and soil conditions allow.
.

Purpose

Austin Sand Filters are used primarily for water quality control. However, they do provide detention and slow release over time of the WQV. Whether this amount will be sufficient to provide the necessary peak flow rate reductions required for channel erosion control is dependent upon the site conditions. However, in cases where quantity detention beyond the volume of the WQV is required, an attractive alternative may well be to utilize a combined detention basin/pre-settling basin configuration, with the controlled release of the entire stored volume to the sand filter facility.

FIGURE 3.12C - 1
Austin Full Sedimentation Sand Filter System at Barton Ridge Plaza

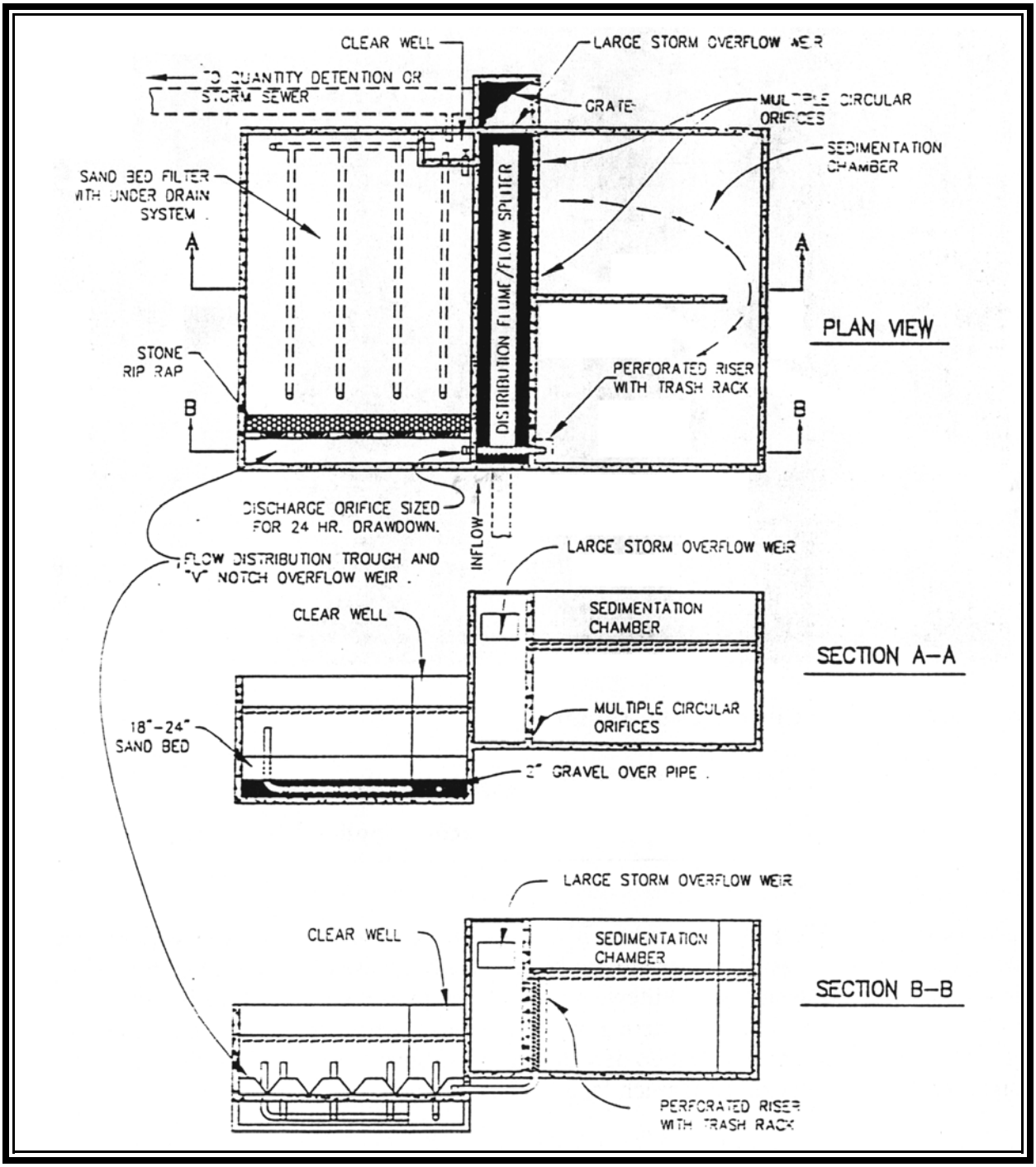

FIGURE 3.12C - 2
Sedimentation Basin of Jolleyville Partial Sedimentation System

(Poto Courtesy of the City of Austin, Texas)

Conditions Where Practice Applies

Austin Sand Filters Filters are ultra-urban BMPs best suited for use in situations where space is too constrained and/or real estate values are too high to allow the use of conventional retention ponds. Unlike D.C. and Delaware Sand Filters, when full sedimentation protection is provided, Austin filters may be used in situations where a higher amount of pervious surfaces are present or where higher sediment loads from deposition of wind-blown sediments are encountered. Because of their design, they may also be used on much larger drainage sheds.

Drainage Area

Austin full sedimentation and partial sedimentation basin sand filters have been used on drainage sheds up to 30 acres, and with great economy of scale. **Table 3.12-1** illustrates the relative costs of varying sized systems in Austin in mid-1990.

TABLE 3.12C - 1
Cost of Austin Sand Filtration Systems *(June 1990)*

Drainage Area (Acres)	Water Quality Volume (ft^3)	Cost/Acre ($/acre)	Cost/ft^3 ($/$ft^3$)	Total Cost ($)
1.0	1815	13,613* 19,058#	7.50* 10.50#	13,613* 19,058#
2.0	3,630	8,440* 9,801#	4.65* 5.40#	16,880* 19,602#
5.0	9,075	5,136	2.83	25,682
10.0	18,150	3,812	2.10	38,115
15.0	27,225	3,086	1.70	46,283
20.0	36,300	2,723	1.50	54,450
30.0	54,450	2.360	1.30	70,785

Footnotes:
* Calculated from data provided by Murfee Engineers
# Calculated from data provided by Austin Stormwater Management staff
All other values derived from combined data

While Austin has traditionally built these systems in open basins, there appears no reason why the basic designs cannot be adapted to underground vault construction where real estate values are high enough to justify their use. Austin Partial Sedimentation Sand Filters have been built in underground vaults in Alexandria on sheds of three-four acres of impervious cover. Precast segmented underground vaults are now available in very large configurations. Besides the modified precast box culvert technology illustrated under **MS 3.12A: D.C. Sand Filters**, precast arch technology has also been adapted to the construction of underground vaults. **Figure 3.12C-3** shows such a system. It appears that approximately five acres of impervious cover is the uper limit of the area that should be treated by a single underground vault system.

FIGURE 3.12C - 3
Underground Vault Fabricated From Precast Bridge Arch Components

(Photo Courtesy of BridgeTek Bridge Technologies, LLC., Fredericksburg, Virginia)

Development Conditions

Austin Sand Filters are generally suitable BMPs for medium to high density commercial or industrial development. Because of confined space entry restrictions when constructed in underground vaults and maintenance requirements, they are not generally suitable for residential applications except for apartment complexes or large condominiums where a dedicated maintenance force will be present.

Planning Considerations

Refer to the **Planning Considerations** for **Minimum Standard 3.12: General Intermittent Sand Filter Practices**. Of special concern are the stormwater infrastructure serving the site and the requirement to isolate the sand filter from receiving flows until the drainage shed is fully stabilized.

Potential and existing elevations of stormwater infrastructure serving the site will determine one of the most critical design parameters: the maximum depth to which runoff may be pooled over the filter and preserve a gravity flow configuration (whatever the pooling depth, there must be a minimum of five feet of clearance between the top of the filter and the top slab of the filter shell to allow filter maintenance).

*Sand filter BMPS must **never** be placed in service until all site work has been completed and stabilization measures have been installed and are functioning properly.*

Design Criteria

The purpose of this section is to provide recommendations and minimum criteria for the design of Austin Sand Filter BMPs intended to comply with the Virginia Stormwater Management program's runoff quality requirements.

Refer to the **General Design Criteria** previously discussed under **General Intermittent Sand Filter Practices, Minimum Standard 3.12**

Filter Sizing Criteria

1. *Full Sedimentation with Filtration*

In this configuration, the sedimentation basin receives the WQV and detains it for a minimum draw-down time (time required to empty the basin from a full WQV condition) of 24 hours. The effluent from the sedimentation basin is discharged into the filtration basin..

Austin conducted a literature review of sedimentation basins and slow rate filters to establish design criteria.

For filtration basins, surface area is the primary design parameter. The required surface area is a function of sand permeability, bed depth, hydraulic head and sediment loading. A filtration rate of 0.0545 gallons per minute per square foot has been selected for design criteria (10.5 feet per day or 3.4 million gallons per acre per day). This filtration rate is based on a Darcy's Law coefficient of permeability k =3.5 feet per day, an average hydraulic head (h) of three (3) feet and a sand bed depth (d_f) of 18 inches, and a filter drawdown time, t_f of 40 hours.

Substituting these values in the basic Austin Filter Formula shown in **General Intermittent Sand Filter Practices, Minimum Standard 3.12** yields:

$A_f = I_a H/18$

where "A_f" is the minimum surface area of the filtration media in acres, "I_a" is the contributing impervious runoff area in acres and "H" is the runoff depth in feet (0.5 inch = 0.0417 feet when treating the WQV).

When treating the first 1/2-inch of runoff, this formula reduces to

$A_f = 0.0023I_a = 100\ Ft^2$ of filter per impervious acre.

This formula is obviously based on a number of simplifying assumptions. Determining the actual average depth of ponding over the filter is an extremely complex proposition considering thet the runoff is being released from the sedimentation chamber to the filter at first a rising and then a falling head and then percolating through the sand filter at first a rising and then a falling head. However, this design procedure has worked well for austin for over a decade and may be therefore be considered to be vaild.

When treating a volume greater than the WQV (as when a combined quantity detention/presettling basin is utilized) use the following formula:

$A_f = 0.0023I_a \times (TV / WQV)$

Where TV = the full retention volume of the detention basin/presettling basin.

2. Partial Sedimentation with Filtration

In this configuration, the sedimentation basin or chamber holds a minimum of 20 percent of the WQV and is hydraulically connected to the filter basin with orifices or slots which allow the water level to equalize between the two chambers.

For Austin Sand Filters with partial sedimentation protection, utilize the following formula:

$$A_{fm(PS)} = \frac{545 I_a d_f}{(h + d_f)}$$

where,

I_a = impervious cover on the watershed in acres
d_f = sand bed depth (normally 1.5 to 2ft)
h = average depth of water above surface of sand media between full and empty basin conditions (ft.)

Sedimentation Basin Sizing

1. *Full Sedimentation with Filtration*

The sedimentation basin must hold the entire WQV (or larger treatment volume) and release it to the filter over 24 hours. The volume of the basin is thus set by the amount of area to be treated. For sedimentation basins, the removal of discrete particles by gravity settling is primarily a function of surface loading, "Q_o/A_s ", where "Q_o " is the rate of outflow from the basin and "A_s" is the basin surface area. Basin depth is of secondary importance as settling is inhibited only when basin depths are too shallow (particle resuspension and turbulence effects). For sedimentation, surface area is the primary design parameter for a fixed minimum draw-down time, t_d, of 24 hours. Removal efficiency, E, is also a function of particle size distribution. For design purposes, the particles selected for complete removal in the sedimentation basin are those which are greater than or equal in size to silt with the following characteristics: particle diameter 0.00007 foot (20 microns) and specific gravity of 2.65. These are typical values for urban runoff .

Presettling basins are usually sized using the Camp-Hazen equation (Claytor and Schueler, 1996):

$$A_S = - (Q_O / w) \times Ln (1 - E)$$

Where,

A_S = Surface area (ft^2) of the sedimentation basin
E = Trap efficiency, which is the target removal efficiency of suspended solids (use 90%)
w = Particle settling velocity; for silt, use 0.0004 ft/sec
Q_O = rate of outflow from the basin = WQV (or treatment volume) divided by the detention time (24 hours)

Substituting the values recommended above yields the simplified formula:

$$A_S = 0.066 \times WQV \quad (ft^2)$$

For 1816 ft^3, this yields an area of 120 ft^2. However, Austin recommends that the sedimentation basin be no more that 10 feet deep, which yields a surface area approximately 115% of the basin Camp-Hazen area. The Austin formula for minimum surface area is:

$$A_S = 0.0042\ I_a$$

Where I_a is the contributing impervious runoff area in acres

2. Partial Sedimentation with Filtration

The minimum area of the sediment chamber may be computed by the formula:

$$A_S = WQV / 2h$$

Where 2h = the maximum depth of ponding over the filter and the sediment chamber.

Additional Full Sedimentation Basin Considerations

1. *Inlet Structure*

The inlet structure design must be adequate for isolating the water quality volume from the design storm and to convey the peak flow for the design storm past the basin. The water quality volume should be discharged uniformly and at low velocity into the sedimentation basin in order to maintain near quiescent conditions which are necessary for effective treatment. It is desirable for the heavier suspended material to drop out near the front of the basin; thus a drop inlet structure is recommended in order to facilitate sediment removal and maintenance. Energy dissipation devices may be necessary in order to reduce inlet velocities which exceed three (3) feet per second.

2. *Outlet Structure*

The outlet structure conveys the water quality volume from the sedimentation basin to the filtration basin. The outlet structure shall be designed to provide for a minimum draw-down time of 24 hours. A perforated pipe or equivalent is the recommended outlet structure. The 24 hour draw-down time should be achieved by installing a throttle plate or other flow control device at the end of the riser pipe (the discharges through the perforations should not be used for draw-down time design purposes)

3. *Basin Geometry*

The shape of the sedimentation basin and the flow regime within this basin will influence how effectively the basin volume is utilized in the sedimentation process. The length to width ratio of the basin should be 2:1 or greater. Inlet and outlet structures should be located at extreme ends of the basin in order to maximize particle settling opportunities.

Short-circuiting (i.e., flow reaching the outlet structure before it passes through the sedimentation basin volume) flow should be avoided. Dead storage areas (areas within the basin which are by-passed by the flow regime and are, therefore, ineffective in the settling process) should be minimized. Baffles may be used to mitigate short circuiting and/or dead storage problems. The sedimentation illustrated in **Figure 3.12C-1** (photo in **Figure 3.12-4**) illustrates the use of baffles to improve sedimentation basin performance.

4. *Sediment Trap (Optional)*

A sediment trap is a storage area which captures sediment and removes it from the basin flow regime. In so doing the sediment trap inhibits resuspension of solids during subsequent runoff events, improving long-term removal efficiency. The trap also maintains adequate volume to hold the water quality volume which would otherwise be partially lost due to sediment storage. Sediment traps may reduce maintenance requirements by reducing the frequency of sediment removal. It is recommended that the sediment trap volume be equal to ten (10) percent of the sedimentation basin volume. Water collected in the sediment trap shall be conveyed to the filtration basin in order to

prevent standing water conditions from occurring. All water collected in the sediment trap shall drain out within 60 hours. The invert of the drain pipe should be above the surface of the sand bed filtration basin. The minimum grading of the piping to the filtration basin should be 1/4 inch per foot (two (2) percent slope). Access for cleaning the sediment trap drain system is necessary.

Design Storm

The inlet design or integral large storm bypass must be adequate for isolating the WQV from the design storm for the receiving storm sewer system (usually the 10 year storm) and for conveying the peak flow of that storm past the filter system. Since D.C. Sand Filters will be used only as off-line facilities in Virginia, the interior hydraulics of the filter are not as critical as when used as an on-line facility. The system should draw down in approximately 40 hours.

Infrastructure Elevations

For cost considerations, it is preferable thatAustin Sand Filters work by gravity flow. This requires sufficient vertical clearance between the invert of the prospective inflow storm piping and the invert of the storm sewer which will receive the outflow. In cases where gravity flow is not possible, a clearwell sump and pump are required to discharge the effluent into storm sewer. Such an application would be appropriate in commercial or industrial situations where a dedicated maintenance force will be available (shopping malls, apartment houses, factories of other industrial complexes, etc.).

Special Considerations for Underground Filter Systems

When Austin Sand Filters are placed underground, a number of special considerations pertain. The restrictive orifice or gate valve for controlling the release of water from a separate sedimentation vault should be placed in a manhole located between the sedimentation vault and the filter vault. The sedimentation vault should contain a sediment sump into which accumulated sediments may be flushed with a high pressure hose for removal by vacuum trucks. Water should enter the filter vault in a separate headbox with a permanent pool for energy absorbtion and a hydrocarbon trap like that of a D.C. Sand Filter. The filter vault should also contain a separate clearwell.

Structural Requirements

The load-carrying capacity of the filter structure must be considered when it is located under parking lots, driveways, roadways, and, certain sidewalks (such as those adjacent to State highways). Traffic intensity may also be a factor. The structure must be designed by a licensed structural engineer and the structural plans require approval by the plan approving jurisdiction.

Accessibility and Headroom for Maintenance

Both the sedimentation basin and the filter must be accessible to appropriate equipment and vacuum trucks for removing accumulated sediments and trash. The sedimentation basin must be cleaned approximately once per year, and the filter will likely need raking on that frequency to remove trash and restore permeability. When filters are placed in underground vaults, all chambers must have

personnel access manholes and built-in access ladders. **A minimum headspace of 60 inches above the filter is required to allow such maintenance and repair.** A 38-inch diameter maintenance manhole with eccentric nested covers (a 22-inch personnel access lid inside the 38-inch diameter lid) or a rectangular load bearing access door (minimum 4 ft. x 4 ft.) should be positioned directly over the center of the filter. A 30-inch manhole should also be placed directly over the sediment sump in an underground sedimentation vault. Similar manholes must be positioned to provide access for a high-pressure hose to reach all points in the sediment vault.

Construction Specifications

Sedimentation Basin Liners

Impermeable liners may be either clay, concrete or geomembrane. If geomembrane is used, suitable geotextile fabric shall be placed below and on the top of the membrane for puncture protection. Clay liners shall meet the specifications in **Table 3.12C-2**:

The clay liner shall have a minimum thickness of 12 inches.

If a geomembrane liner is used it shall have a minimum thickness of 30 mils and be ultraviolet resistant.

The geotextile fabric (for protection of geomembrane) shall meet the specifications in **Table 3.12C-3**.

TABLE 3.12C - 2
Clay Liner Specifications

Property	Test Method	Unit	Specification
Permeability	ASTM D-2434	Cm/Sec	1×10^{-6}
Plasticity Index of Clay	ASTM D-423 & D-424	%	Not less than 15
Liquid Limits of Clay	ASTM D-2216	%	Not less than 30
Clay Compaction	ASTM-2216	%	95% of Standard Proctor Density
Clay Particles Passing	ASTM D-422	%	Not less than 30

Source: City of Austin

TABLE 3.12C - 3
Geotextile Specification for Basin Liner "Sandwich"

Property	Test Method	Unit	Specification
Unit Weight		Oz./Sq.Yd.	8 (minimum)
Filtration Rate		In./Sec.	0.08 (minimum)
Puncture Strength	ASTM D-751 (Modified)	Lb.	125 (minimum)
Mullen Burst Strength	ASTM D-751	Psi.	400 (minimum)
Tensile Strength	ASTM D-1682	Lb.	300
Equiv. Opening Size	U.S. Standard Sieve	No.	80 (minimum)

Source: City of Austin

Equivalent methods for protection of the geomembrane liner will be considered on a case by case basis. Equivalency will be judged on the basis of ability to protect the geomembrane from puncture, tearing and abrasion.

Portland Cement Concrete

Concrete liners may be used for sedimentation chambers and for sedimentation and filtration basins. Concrete shall be at least five (5) inch thick Class A3 defined in the Virginia Department of Transportation *Road and Bridge Specifications.*

Outlet Structure for Full Sedimentation Basin

A perforated pipe or equivalent is the recommended outlet structure. The 24-hour draw-down should be achieved by installing a throttle plate or other control device at the end of the riser pipe (the discharges through the perforations should not be used for draw-down time design purposes). The perforated riser pipe should be selected from **Table 3.12-4.**

TABLE 3.12C - 4
Perforated Riser Pipes

Riser Pipe Nominal Diameter (inches)	Vertical Spacing Between Rows (Center to Center in Inches)	Number of Perforations Per Row	Diameter of Perforations (inches)
6	2.5	9	1
8	2.5	12	1
10	2.5	16	1

Source: City of Austin

A trash rack shall be provided for the outlet. Openings in the rack should not exceed 1/3 the diameter of the vertical riser pipe. The rack should be made of durable material, resistant to rust and ultraviolet rays. The bottom rows of perforations of the riser pipe should be protected from clogging. To prevent clogging of the bottom perforations it is recommended that geotextile fabric be wrapped over the pipe's bottom rows and that a cone of one (1) to three (3) inch diameter gravel be placed around the pipe. If a geotextile fabric wrap is not used then the gravel cone must not include any gravel small enough to enter the riser pipe perforations. **Figure 3.12C-4** illustrates these considerations.

Outlet Structure for Partial Sedimentation Basin

The outlet structure should be a berm or wall with multiple outlet ports or a gabion so as to discharge the flow evenly to the filtration basin. Rock gabions should be constructed using 6-8 inch diameter rocks. The berm/wall/gabion height should not exceed six (6) feet and high flows should be allowed to overtop the structure (weir flow). Outlet ports should not be located along the vertical center axis of the berm/wall so as to induce flow-spreading. The outflow side should incorporate features to prevent gouging of the sand media (e.g., concrete splash pad or riprap)

Sand Filter Layer

For applications in Virginia, use **ASTM C33 Concrete Sand** or sand meeting the Grade A fine aggregate gradation standards of Section 202 of the VDOT ***Road and Bridge Specifications.*** The top of the sand filter must be completely level.

Geotextile Fabrics

The filter cloth layer beneath the sand shall conform to the specifications shown in **Table 3.12C-5**: The fabric rolls must be cut with sufficient dimensions to cover the entire wetted perimeter of the filtering area and lap up the filter walls at least six-inches.

FIGURE 3.12C - 4
Riser Pipe Detail for Full Sedimentation Basin

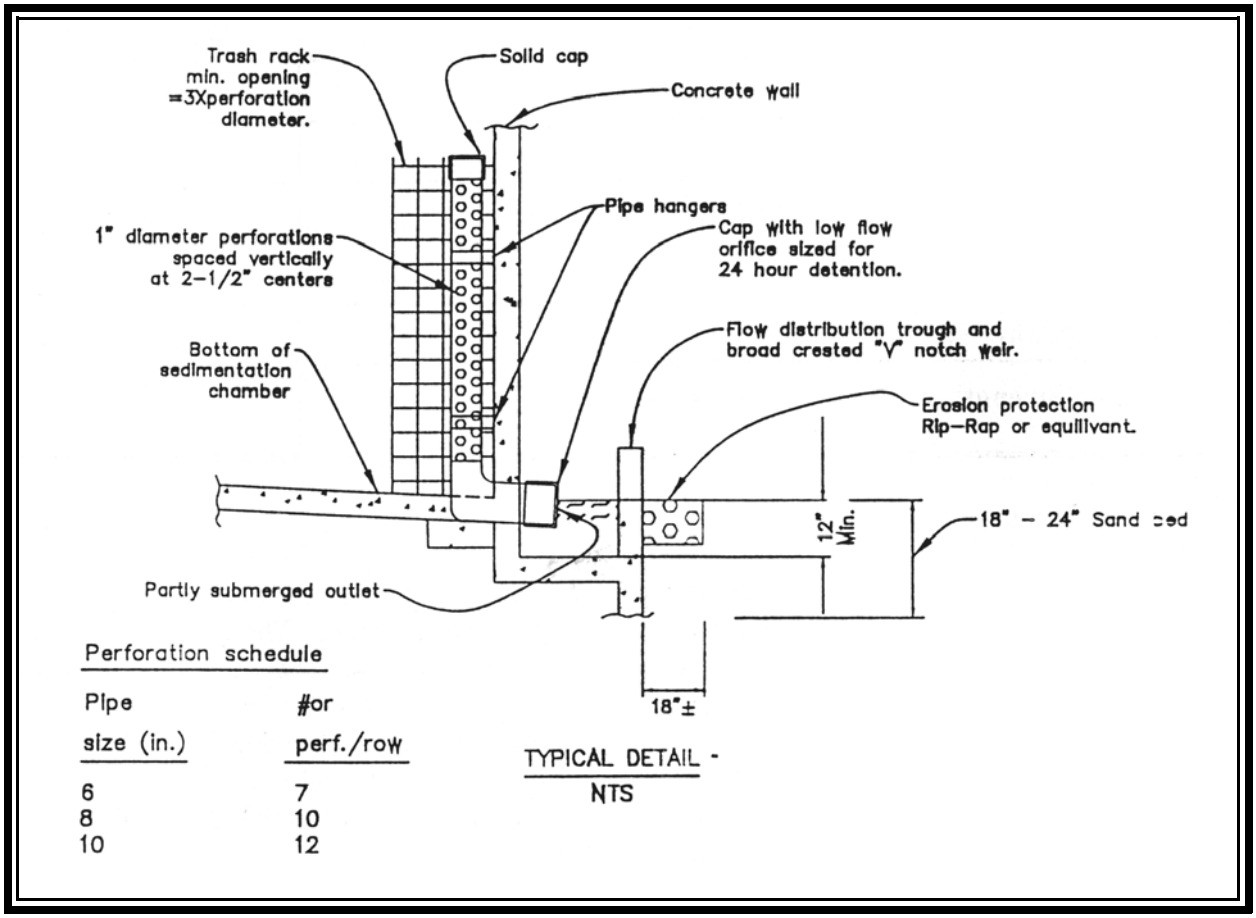

Table 3.12C - 5
Specifications for Nonwoven Geotextile Fabric Beneath Sand in Austin Sand Filter

Property	Test Method	Unit	Specification
Unit Weight	--	Oz./sq.yd.	8.0 (min.)
Filtration Rate	--	In/sec	0.08 (min.)
Puncture Strength	ASTM D-751 (Modified)	Lb.	125 (min.)
Mullen Burst Strength	ASTM D-751	Psi	400 (min.)
Equiv. Opening Size	U.S. Standard Sieve	No.	80 (min.)
Tensile Strength	ASTM D-1682	Lb.	300 (min.)

Gravel Bed Around Collector Pipes

The gravel layer surrounding the collector pipes shall be ½ to two (2) inch diameter gravel and provide at least two (2) inches of cover over the tops of the drainage pipes. The gravel and the sand layer are usually separated by a layer of geotextile fabric meeting the specification listedabove. However, on small underground vault partial sedimentation systems, some jurisdictions allow the substitution for an additional six-inch layer of 1/4-inch washed pea gravel in lieu of the filter fabric. In such cases, hydraulic compaction and refilling of the filter is especially important. **FIGURE 3.12C-5** shows a cross-section of a filter with the usual configuration. **FIGURE 3.12C-6** shows an underground vault filter with a six-inch pea gravel layer.

Underdrain Piping

The underdrain piping consists of 4-inch or 6-inch schedule 40 or better polyvinyl perforated pipes reinforced to withstand the weight of the overburden. Perforations should be 3/8 inch, and each row of perforations shall contain at least four holes for four-inch pipe and six holes for six-inch pipe. Maximum spacing between rows of perforations shall be six (6) inches. Maximum spacing between pipes shall be 10 feet.

The minimum grade of piping shall be 1/8 inch per foot (one [1] percent slope). Access for cleaning all underdrain piping is needed. Clean-outs for each pipe shall extend at least six (6) inches above the top of the upper filter surface, e.g. the top layer of gravel.

Each pipe shall be thoroughly wrapped with 8 oz./sq.yd. geotextile fabric meeting the specification in **Table 3.12C-1** above.

FIGURE 3.12C - 5
Austin Sand Filter Cross-Section With Filter Fabric Layer

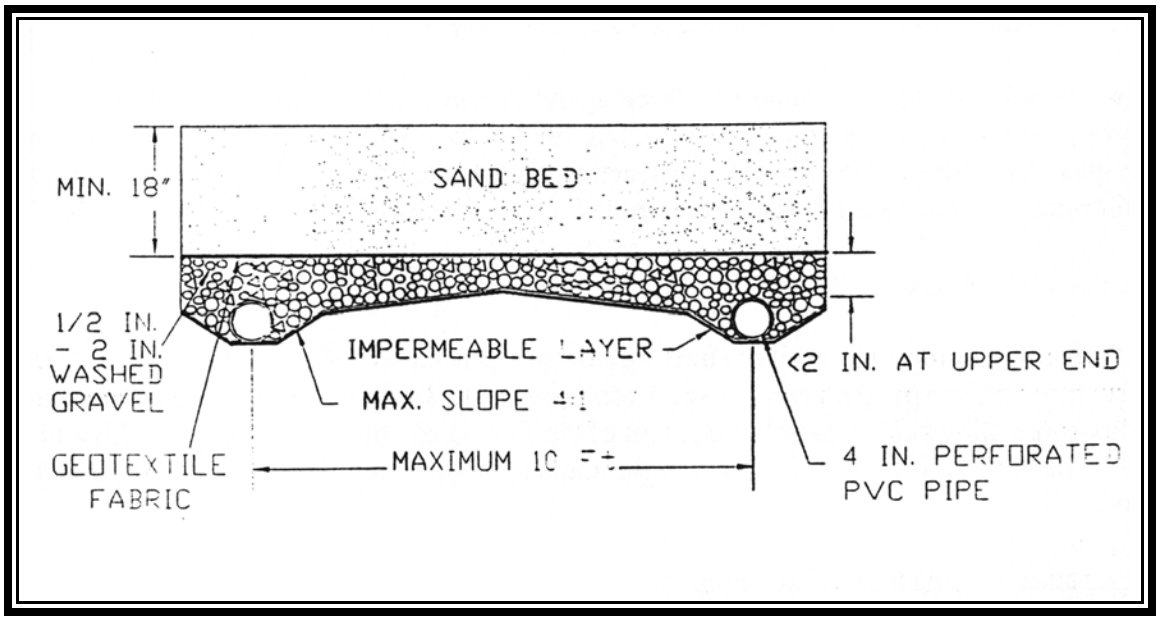

FIGURE 3.12C - 6
Partial Sedimentation Vault Filter With Pea Gravel Layer

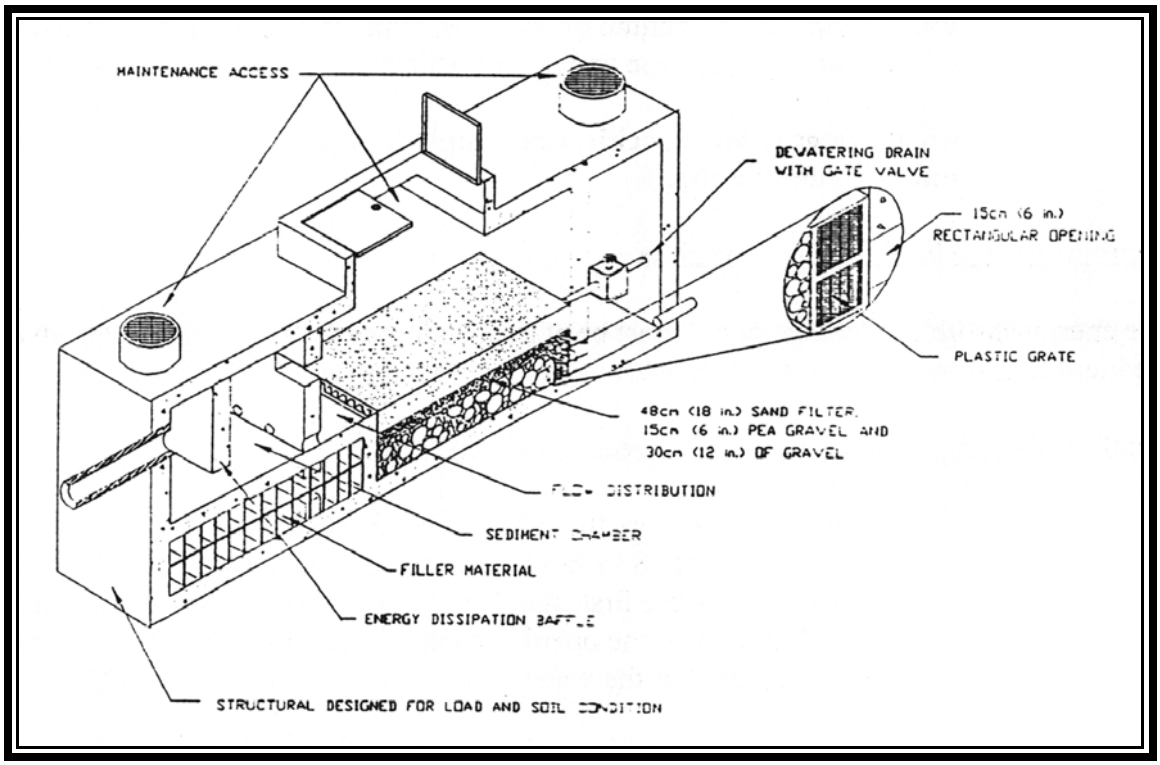

Protection from Construction Sediments

The site erosion and sediment control plan must be configured to permit construction of the filter system while maintaining erosion and sediment control.

No runoff is to enter the sand filtration system prior to completion of all construction and site revegitation. Construction runoff shall be treated in separate sedimentation basins and routed to by-pass the filter system. Should construction runoff enter the filter system prior to site revegitation, all contaminated materials must be removed and replaced with new clean materials.

Watertight Integrity Test

After completion of the filter shell but before placement of the filter layers, entrances to the structure shall be plugged and the shell completely filled with water to demonstrate water tightness. Maximum allowable leakage is 5 percent of the filter shell volume in 24 hours. Should the structure fail this test, it shall be made watertight and successfully retested prior to placement of the filter layers.

Hydraulic Compaction of Filter Components

After placement of the collector pipes, gravel, and lower geotextile layer, fill the shell with filter sand to the level of the top of the sediment pool weir. Direct clean water into the sediment chamber until both the sediment chamber and filter chamber are completely full. Allow the water to draw down until flow from the collector pipes ceases, hydraulically compacting the filter sand. After allowing the sand to dry out for a minimum of 48 hours, refill the shell with sand to a level one inch beneath the top of the weir and place the upper geotextile layer and gravel ballast.

Note: The following Construction Specifications apply to Austin Sand Filters which are to be constructed in underground vaults.

Depth of Plunge Pool in Filter Headbox

The energy absorbing "plunge pool" must be at least 36 inches deep to properly absorb energy from the incoming flow and trap any hydrocarbons which pass through the sedimentation vault.

Depth of the Underwater Opening Between Chambers

To preserve an effective hydrocarbon trap, the top of the underwater opening between the headbox and the filter chamber must be at least 18 inches below the depth of the weir which divides the filter from the pool. To retain sediment in the first chamber, the bottom of the opening should be at least six inches above the floor. The area of the opening should be at least 1.5 times the cross-sectional area of the inflow pipe(s) to assure that the water level remains equal between the first and second chambers.

Total Depth of Filter Cross-Section

The total depth of the filter cross-section must match the height of the weir dividing the sedimentation pool from the filter. Otherwise, a "waterfall" effect will develop which will gouge out the front of the filter media. If a sand filter less than 24 inches is used, the gravel layer must be increased accordingly to preserve the overall filter depth.

Dewatering Drain

When the filter is placed in an underground vault, A 6-inch dewatering drain controlled by a gate valve shall be installed between the filter chamber and the clearwell chamber with its invert at the elevation of the top of the filter. The dewatering drain penetration in the chamber dividing wall shall be sealed with a flexible strip joint sealant which swells in contact with water to form a tight pressure seal.

Access Manholes

When the filter is installed in an underground vault, access to the headbox (sediment chamber) and the clearwell shall be provided through at least 22-inch manholes. Access to the filter chamber shall

be provided by a rectangular door (minimum size: 4 feet by four feet) of sufficient strength to carry prospective imposed loads or by a manhole of at least 3- inch diameter with an offset concentric 22-inch lid (Neenah R-1741-D or equivalent).

Restrictive Orifice Manhole Between Vaults

The restrictive orifice or gate valve on the outlet pipe from the sedimentation vault should be placed in a manhole between the sedimentation and filter vaults with ready personnel access. **Figure 3.12C-7** illustrates this principle.

Maintenance/Inspection Guidelines

The following maintenance and inspection guidelines are not intended to be all inclusive. Specific facilities may require other measures not discussed here.

Major Maintenance Requirements for Sedimentation Basins

1. Removal of silt when accumulation exceeds six (6) inches in sediment basins without sediment traps. In basins with sediment traps, removal of silt shall occur when the accumulation exceeds four (4) inches in the basins, and sediment traps shall be cleaned when full.

2. Removal of accumulated paper, trash and debris every six (6) months or as necessary.

3. Vegetation growing within the basin is not allowed to exceed 18 inches in height at any time.

4. Corrective maintenance is required any time a sedimentation basin does not drain the equivalent of the Water Quality Volume within 40 hours (i.e., no standing water is allowed).

5. Corrective maintenance is required any time the sediment trap (optional) does not drain down completely within 96 hours (i.e., no standing water allowed).

Major Maintenance Requirements for Filtration Components

1. Removal of silt when accumulation exceeds 1/2 inch. - Removal of accumulated paper, trash and debris every six (6) months or as necessary.

2. Vegetation growing within the basin is not allowed to exceed 18 inches in height.

3. Corrective maintenance is required any time draw-down does not occur within 36 hours after the sedimentation basin has emptied.

4. When an underground vault filter will no longer draw down within the required 36-hour period because of clogging with silt (approximately every 3-5 years), the upper layer of gravel and

geotechnical cloth must be replaced with new clean materials meeting the original specifications.

5. Monitoring manholes, flumes, and other facilities shall be kept clean and ready for use.

The BMP shall be inspected annually by representatives of the owner and the governing jurisdiction staff to assure continued proper functioning.

FIGURE 3.12C - 7
Restrictive Orifice Access Manhole

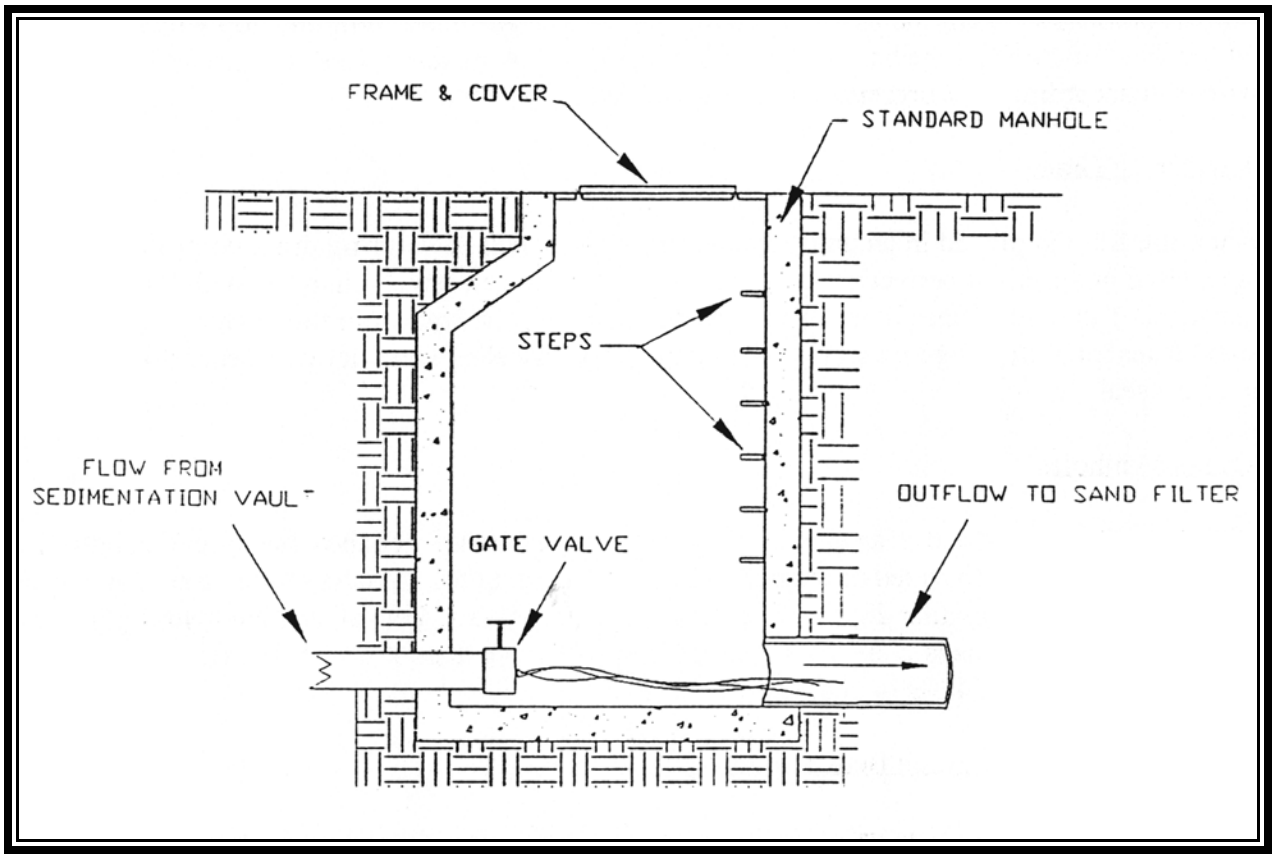

Sediment Chamber Pumpout

Full sedimentation chambers or basins require flushing and pumpout with a vacuum truck approximately once per year.

Concrete Shell Inspection

Concrete will deteriorate over time, especially if subjected to live loads. The concrete shell, risers, etc., must be examined during each annual inspection to identify areas that are in need of repair, and such repairs must be promptly effected.

Design Procedures

The following design procedure is structured to assure that the desired water quality volume is captured and treated by theAustin Filter. The procedure assumes that a filter shell with a rectangular cross-section is to be used.

Standard Design Logic

Employ the following design logic to design Austin Sand Filters for use in Virginia:

1. Determine Governing Site Parameters

Determine the Impervious area on the site (I_a in acres), the water quality volume to be treated (WQV in ft.^{3} = 1816 I_a), and the site parameters necessary to establish 2h, the maximum ponding depth over the filter (storm sewer invert at proposed connection point, elevation to inflow invert to BMP, etc).

2. Select Filter Depth and Determine Maximum Ponding Depth

Considering the data from Step 1) above, select the Filter Depth ((d_f) and determine the maximum achievable ponding depth over the filter (2h).

3. For Full Sedimantation Systems, size the sedimentation basin (vault) to hold the WQV with a minimum depth of 10 feet.

4. Compute the Minimum Area of the Sand Filter (A_{fm})

For systems with full sediment protection, provide a dediment chamber of sufficient volume to hold the WQV. Make the depth $\leq$ ten feet. To compute the area of the filter, use the formula:

$$A_f = 100I_a$$

Where I_a = the impervious acreage on the drainage shed.

For systems with only partial sediment protection, utilize the formula:

$$A_{fm(PS)} = \frac{545I_a d_f}{(h + d_f)}$$

A_{fm} = minimum surface area of sand bed (square feet)
I_a = impervious cover on the watershed in acres
d_f = sand bed depth (normally 1.5 to 2ft)
h = average depth of water above surface of sand media between full and empty basin conditions (ft.)

5. Select Filter Width and Compute Filter Length and Adjusted Filter Area

Considering site constraints, select the Filter Width (W_f). Then compute the Filter Length (L_f) and the Adjusted Filter Area (A_f)

$$L_f = A_{fm}/W_f$$

$$A_f = W_f \times L_f$$

Sizing computations are completed at this point for the full sediment protection system. The only remaining task is to assure that the filter chamber is sized to contain a minimum of 20 % of the WQV. The logic continues for the partial sedimentation system.

6. Compute the Storage Volume on Top of the Filter (V_{Tf})

$$V_{Tf} = A_f \times 2h$$

7. Compute the Storage in the Filter Voids (V_v)
(Assume 40% voids in filter media)

$$V_v = 0.4 \times A_f \times (d_f + d_g)$$

8. Compute Flow Through Filter During Filling (V_Q)
(Assume 1-hour to fill per D.C. practice)

$$V_Q = \frac{kA_f(d_f + h)}{d_f} \text{ ; use } k = 2 \text{ ft./day} = 0.0833/\text{hr.}$$

9. Compute Net Volume to be Stored Awaiting Filtration (V_{st})

$$V_{st} = WQV - V_{Tf} - V_v - V_Q$$

10. Compute Length of Sediment chamber (L_{SC})

$$L_{SC} = \frac{V_{st}}{(2h \times W_f)}$$

11. Compute Minimum Length of Sediment Chamber (L_s)
(to contain 20% of WQV per Austin practice)

$$L_{sm} = \frac{0.2WQV}{(2h \times W_f)}$$

12. Set Final Length of the Sediment Chamber (L_{SCF})

If $L_{SC} \geq L_s$, make $L_{SCF} = L_{SC}$

If $L_{SC} < L_{sm}$, make $L_{SCF} = L_{sm}$

It may be economical to adjust final dimensions to correspond with standard precast structures or to round off to simplify measurements during construction.

Checklists

The **Construction Inspection and As-Built Survey Checklist** found in **Appendix 3D** is for use in inspecting intermittent sand filter facilities during construction and, where required by the local jurisdiction, engineering certification of the filter construction. The **Operation and Maintenance Checklist**, also found in **Appendix 3D**, is for use in conducting maintenance inspections of intermittent sand filter facilities.

REFERENCES

Anderson, D.L., Siegrist, R.L. and Otis, R.J. (Undated) Technology assessment of intermittent sand filters. Municipal Environmental Research Laboratory, Office of Research and Development, U.S. Environmental Protection Agency, Cincinnati, Ohio.

Bell, Warren, Stokes, Lucky, Gavan, Lawrence J., and Nguyen, Trong Ngu (1995) Assessment of the pollutant removal efficiencies of Delaware sand filter BMPs. Department of Transportation and Environmental Services, City of Alexandria, Virginia.

Bell, Warren and Nguyen, Trong Ngu (1994) Intermittent sand filter BMPs for stormwater quality. Department of Transportation and Environmental Quality, City of Alexandria, Alexandria, Virginia.

Bitter, Susan D. and Bowers, Keith (1994) Bioretention as a water quality best management practice. In: Watershed Protection Techniques, Volume 1, No. 3, Center for Watershed Protection, Silver Spring, Maryland.

The Cadmus Group, Inc. (1991) Guidance on reducing nitrogen loading from septic systems, Contract No. 68-C0-0020, Work Assignment No. 1, Task 3, U.S. EPA Office of Drinking Water, Underground Injection Control Branch, Washington, D.C.

City of Alexandria, Virginia (1992) Unconventional BMP design criteria. In: Alexandria Supplement to the Northern Virginia BMP Handbook. Department of Transportation and Environmental Services, Alexandria, Virginia.

City of Austin, Texas (1988) Water quality management. In: Environmental Criteria Manual. Environmental and Conservation Services Department, Austin, Texas.

Chang, G.C., Parrish, J.H., Soeur, C., and Librach, A.S. (1990) Removal efficiencies of stormwater control structures. Environmental Resources Management Division, Environmental and Conservation Services Department, Austin, Texas.

Claytor, Richard A. And Schueler, Thomas R. (1996) ***Design of Stormwater Filtering Systems.*** Center for Watershed Protection, Silver Spring, Maryland.

Farnham, R.S. and Noonan, T. (1988) An evaluation of secondary treatment of stormwater inflows to Como Lake, Mn., using a peat-sand filter, EPA Project S-005660-02.

Galli, John (1990) Peat-sand filters: a proposed stormwater management practice for urbanized areas. Department of Environmental Programs, Metropolitan Washington Council of Governments, Washington, D.C.

Galli, John (1992) Analysis of urban BMP performance and longevity in Prince George's County, Maryland. Department of Environmental Programs, Metropolitan Washington Council of Governments, Washington, D.C.

Gold, Arthur J., Lamb, Bonnie E., Loomis, George W., and McKiel, Charles G. (Undated) Nitrogen removal for on-site wastewater treatment, Journal Paper No. 2515, Rhode Island Experiment Station, Kingstown, Rhode Island.

Harper, Harvey H. and Herr, Jeffrey L. (1993) Treatment efficiencies of detention with filtration systems. Final report for Saint Johns River Water Management District Contract No. 90B103, Environmental Research & Design, Inc., Orlando, Florida.

Laak, Rein (1986) Wastewater Engineering Design for Unsewered Areas, Technomic Publishing Company, Inc., Lancaster, Pennsylvania.

LaRock, Paul (1988) Evaluation of the Lake Jackson stormwater treatment facility. Final report, Contract No. LR70(A), Florida Department of Environmental Regulation, Tallahassee, Florida.

Livingston, E.H., McCarron, M.E., Cox, J.H., and Sanzone, P.A. (1988) Underdrains and stormwater filtration systems. In: Florida Development Manual: A Guide to Sound Land and Water Management, Florida Department of Environmental Regulation, Tallahassee, Florida.

Mitchell, Dee (1985) Using upflow anaerobic filters as pretreatment for sand filtration of septic tank effluent. University of Arkansas, Fayetteville, Arkansas.

Northern Virginia Planning District Commission (NVPDC) (1992) Chapter 5, BMP planning considerations. In: Northern Virginia BMP Handbook, Northern Virginia Planning District Commission, Annandale, Virginia.

Otis, Richard J. (Undated) Onsite wastewater treatment intermittent sand filters, Rural Systems Engineering, Madison, Wisconsin In: Introductory Package on Sand Filters, WWPCGN29, Small Flows Clearinghouse, West Virginia University, Morgantown, West Virginia.

Piluk, Richard J. and Hao, Oliver J. (1989) Evaluation of on-site waste disposal system for nitrogen reduction. In: Journal of Environmental Engineering, Vol. 115, No. 4. American Society of Civil Engineers, August.

Prince George's County, Maryland (P.G. County) (1993) Design Manual for Use of Bioretention in Stormwater Management, Department of Environmental Protection, Landover, Maryland.

Rock, C.A. and Pinkham, P. Scott (1986) Development of an artificial drainfield to enhance onsite nitrogen removal. In: Appropriate Wastewater Management Technologies for Rural Areas Under Adverse Conditions, Tech Press in Collaboration with the Centre for Water Resources Studies, Halifax, Nova Scotia, Canada.

Ronayne, M.P., Paeth, R.C., and Osborne, T.J. (Undated) Intermittent sand filter design and performance-an update. In: Oregon State Department of Environmental Quality. Introductory Package on Sand Filters, WWPCGN29, Small Flows Clearinghouse, West Virginia University, Morgantown, West Virginia.

Sartor, J. D., Boyd, G.B., and Agardy, F.J. (1974) Water pollution aspects of street surfaces Contaminants. In: Journal Water Pollution Control Federation, Vol. 46: 458-667, Washington, D.C.

Sawyer, Clair N., McCarty, Perry L., and Parkin, Gene F. (1994) Chemistry for Environmental Engineering, Fourth Edition, McGraw-Hill, Inc., New York, New York.

Schueler, Thomas R., Kumble, Peter A., and Hearaty, Maureen A. (1992) A current assessment of urban best management practices. Department of Environmental Programs, Metropolitan Washington Council of Governments, Washington, D.C.

Shaver, Earl and Baldwin, Robert (1991) Sand filter design for water quality treatment. State of Delaware Department of Natural Resources and Environmental Control, Dover, Delaware.

Stenkamp, V. Susie and Benjamin, Mark M. (1994) Effect of iron oxide coating on sand filtration. In: Journal of the American Water Works Association, Volume 86, No. 8, August 1994, Denver, Colorado.

Tchobanoglous, George and Burton, Franklin L (1991) Wastewater Engineering, Third Edition, Metcalf & Eddy, Inc., McGraw-Hill, Inc., New York, New York.

Truong, H.V. (1989) The sand filter water quality structure. Stormwater Management Branch, District of Columbia Environmental Regulation Administration, Washington, D.C.

Truong, H.V., Burrell, C.R., Phua, M.S., Dallas, R.D. (1993) Application of Washington D.C. sand filter for urban runoff control. Stormwater Management Branch, District of Columbia Environmental Regulation Administration, Washington, D.C.

Urbonas, Ben R., Doerfer, John T., and Tucker, L. Scott (1996) Stormwater sand filtration: a solution or a problem. In: ***APWA Reporter***, Volume 63, No. 6., July 1996, American Public Works Association, Washington, D.C.

Viraraghavan, T. (1986) Anaerobic filters for on-site effluents. In: Appropriate Wastewater Management Technologies for Rural Areas Under Adverse Conditions, Tech Press in Collaboration with the Centre for Water Resources Studies, Halifax, Nova Scotia, Canada.

Sand Filter at entrance to service station.

Sand Filter under construction. Note curb cuts for inflow to wet chamber with weir overflow into sand chamber.

General Intermittent Sand Filters

MINIMUM STANDARD 3.13

GRASSED SWALE

View BMP Images

LIST OF ILLUSTRATIONS

#	FIGURES	PAGE
3.13-1	Typical Grassed Swale Configuration	3.13-2
3.13-2	Typical Water Quality Swale Configuration	3.13-3
3.13-3	Typical Check Dam Configurations	3.13-15
3.13-4	Manning's *'n'* Values for Varying Depths of Flow	3.13-16

#	TABLES	PAGE
3.13-1	Pollutant Removal Efficiency for Grassed Swales	3.13-4
3.13-2	Stone or Riprap Sizes for Gabion Baskets	3.13-13

MINIMUM STANDARD 3.13

GRASSED SWALE

Definition

A grassed swale is a broad and shallow earthen channel vegetated with erosion resistant and flood-tolerant grasses. Check dams are strategically placed in the swale to encourage ponding behind them.

A water quality swale is a broad and shallow earthen channel vegetated with erosion resistant and flood tolerant grasses, and underlain by an engineered soil mixture.

Purpose

The purpose of grassed swales and water quality swales is to convey stormwater runoff at a non-erosive velocity in order to enhance its water quality through infiltration, sedimentation, and filtration. Check dams are used within the swale to slow the flow rate and create small, temporary ponding areas. A water quality swale is appropriate where greater pollutant removal efficiency is desired.

Water Quality Enhancement

Grassed swalesand water quality swales remove pollution through *sedimentation*, *infiltration*, and *filtration*. Water quality swales are specifically engineered to filter stormwater through an underlying soil mixture while grasses swales are designed to slow the velocity of flow to encourage settling and filtering through the grass lining. Vegetation filters out the sediments and other particulate pollutants from the runoff and increases the opportunity for infiltration and adsorption of soluble pollutants. The flow rate becomes a critical design element, since runoff must pass through the vegetation slowly for pollutant removal to occur. Monitoring of grassed swales has indicated low to moderate removal of soluble pollutants (phosphorous and nitrogen) and moderate to high removal of particulate pollutants.

Flood Control

Grassed swales and water quality swales will usually provide some peak attenuation depending on the storage volume created by the check dams. However, flood control should be considered a secondary function of grassed swales since the required storage volume for flood control is usually more than they can provide.

FIGURE 3.13 - 1
Typical Grassed Swale Configuration

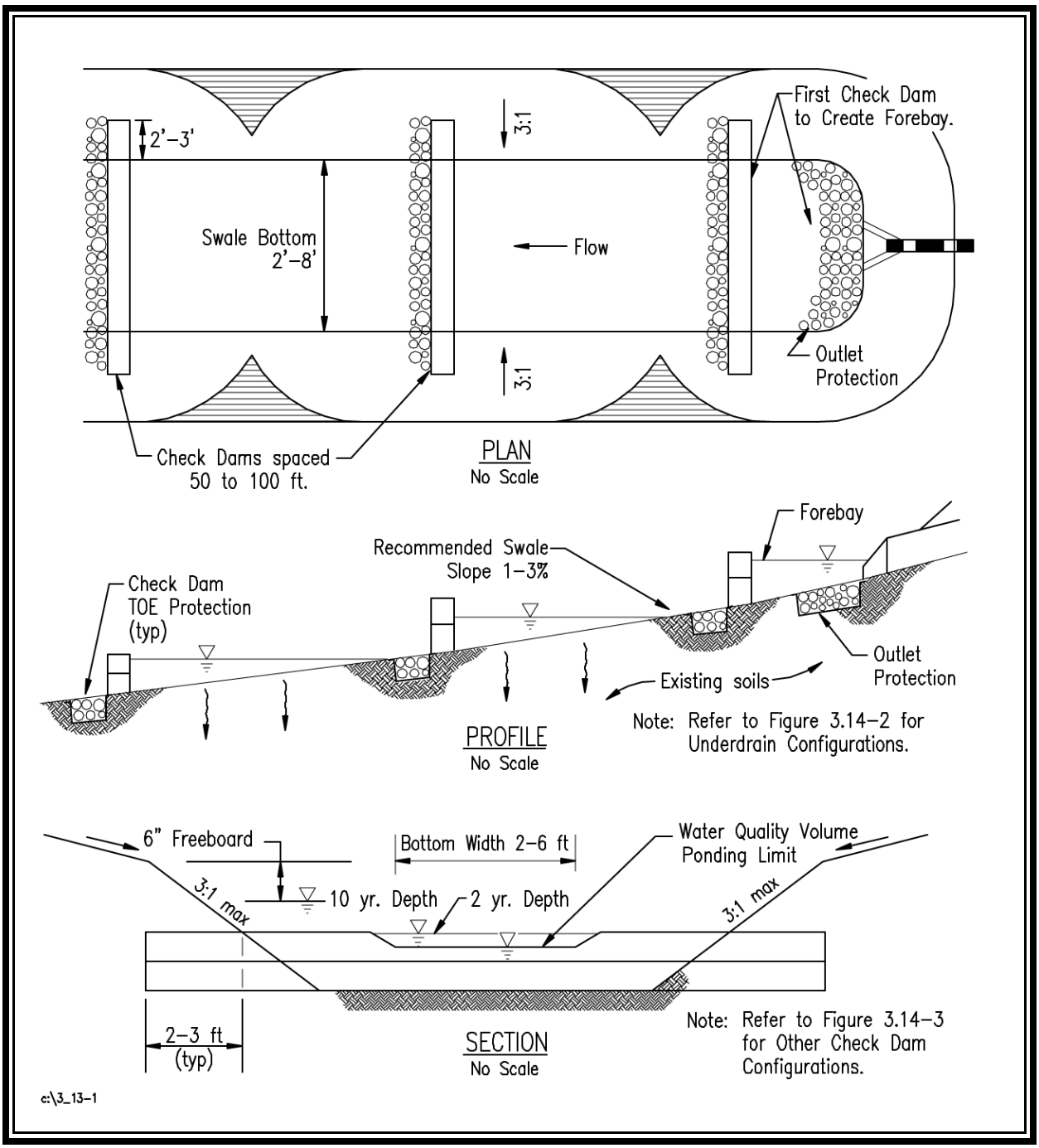

FIGURE 3.13 - 2
Typical Water Quality Swale Configuration

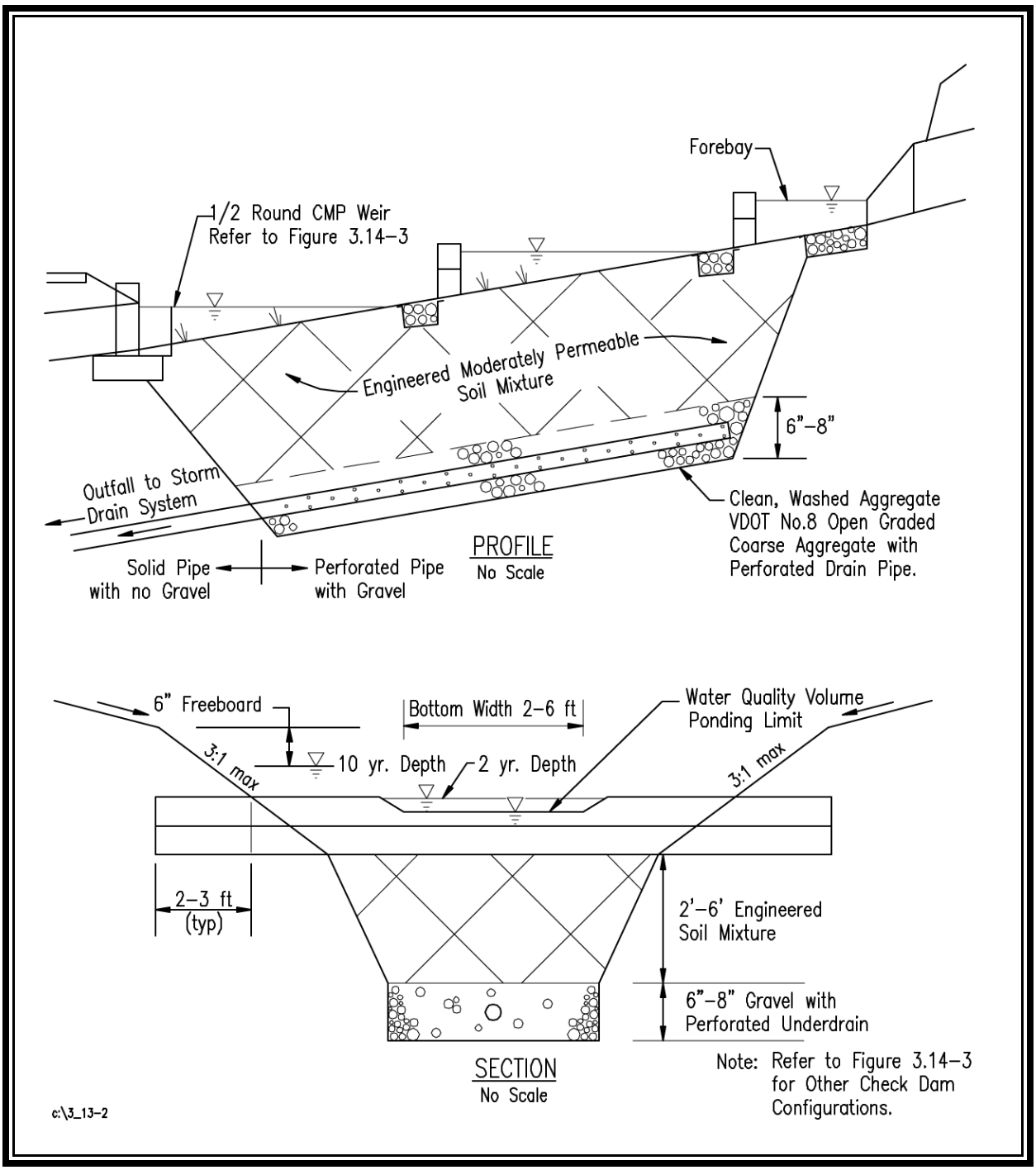

TABLE 3.13 - 1
Pollutant Removal Efficiency for Grassed Swales

Water Quality BMP	Target Phosphorus Removal Efficiency	Impervious Cover
Grassed Swale	15%	16 - 21%
Water Quality Swale	35%	16 - 37%

Channel Erosion Control

Grassed swales and water quality swales may also provide some benefits relative to channel erosion by reducing the peak rate of discharge from a drainage area. However, the holding capacity of a grassed swale designed for water quality purposes is limited.

Condition Where Practice Applies

Drainage Area

Grassed swales and water quality swales engineered for enhancing water quality cannot effectively convey large flows. Therefore, their contributing drainage areas must be kept small. The dimensions (length, width, and overall geometry) and slope of the swale, and its ability to convey the 10-year storm at a non-erosive velocity will set the size of the contributing drainage area.

Development Conditions

Grassed swales are commonly used instead of curb and gutter drainage systems in low- to moderate-density (16 to 21% impervious) single-family residential developments. Since grassed swales do not function well with high volumes or velocities of stormwater, they have limited application in highly urbanized or other highly impervious areas. However, swales may be appropriate for use in these areas if they are constructed in series or as pretreatment facilities for other BMPs.

Grassed swales are usually located within the right-of-way when used to receive runoff from subdivision or rural roadways. They may also be installed within drainage easements along the side or rear of residential lots. Grassed swales can be strategically located within the landscape to intercept runoff from small impervious surfaces (small parking lots, rooftops, etc.) as a component of a subdivision-wide or development-wide BMP strategy.

Water quality swales are appropriate for the same development conditions as those listed for grassed swales with the addition of higher densities of development (16 - 37% impervious) due to the increased pollutant removal capability.

Planning Considerations

Figure 3.13-1 pesents a grassed swale designed to hold small pockets of water behind each check dam. The water slowly drains through small openings in the chack dam and/or infiltrates into the ground. Slow channel velocities allow the vegetation to filter out sediments and other particulate pollutants from the runoff and increases the opportunity for infiltration and adsorption of soluble pollutants.

Figure 3.13-2 presents a water quality swale with an engineered soils media directly under the swale, with an underdrain. This design may be used in areas where the soils are not conducive to infiltration, or in developments where the swale is constructed beside a roadway using fill or compacted soils.

Site Conditions

The following items should be considered when selecting a grassed swale as a water quality BMP:

1. **Soils –** Grassed swales can be used with soils having moderate infiltration rates of 0.27 inches per hour (silt loam) or greater. Besides permeability, soils should support a good stand of vegetative cover with minimal fertilization.

   Water quality swales can be used in areas of unsuitable soil conditions for infiltration since the engineered soil mixture and underdrain system is used in place of the insitu soils.

2. **Topography –** The topography of the site should be relatively flat so that the swale can be constructed with a slope and cross-section that maintains low velocities and creates adequate storage behind the check dams.

3. **Depth to water table –** A shallow or seasonally-high groundwater table will inhibit the opportunity for infiltration. Therefore, the bottom of the swale should be at least 2 feet above the water table.

Sediment Control

Grassed swales may be used for conveyance of stormwater runoff during the construction phase of development. However, the swales should be maintained as required by the Virginia Erosion and Sediment Control Regulations and local program requirements. Before final stabilization, sediment must be removed from the swales and the soil surface prepared for final stabilization. Tilling of the swale bottom may be needed to open the surface pores and re-establish the soil's permeability.

Water quality swales should be constructed after a majority of the drainage area has been stabilized.

(Refer to **Min. Std. 3.11: Bioretention Facilities**).
This section presents minimum criteria and recommendations for the design of grassed swales used to enhance water quality. It is the designer's responsibility to decide which criteria are applicable to the particular swale being designed and to decide if any additional design elements are required. The designer must also provide for the long-term functioning of the facility by choosing appropriate structural materials.

Design Criteria

The design of a water quality grassed swale includes calculations for traditional swale parameters (flow rate, maximum permissible velocities, etc.) along with storage volume calculations for the water quality volume.

Hydrology

The hydrology of a grassed swale's contributing drainage area should be developed per **Chapter 4, Hydrologic Methods**.

Swale Geometry

A grassed swale should have a trapezoidal cross-section to spread flows across its flat bottom. Triangular or parabolic shaped sections will concentrate the runoff and should be avoided. The side slopes of the swale should be no steeper than 3H:1V to simplify maintenance and to help prevent erosion.

Bottom Width

The bottom width of the swale should be 2 feet minimum and 6 feet maximum in order to maintain sheet flow across the bottom and to avoid concentration of low flows. The actual design width of the swale is determined by the maximum desirable flow depth, as discussed below.

Flow Depth

The flow depth for a water quality grassed swale should be approximately the same as the height of the grass. An average grass height for most conditions is 4 inches. Therefore, the maximum flow depth for the water quality volume should be 4 inches (Center for Watershed Protection, 1996).

Flow Velocity

The maximum velocity of the water quality volume through the grassed swale should be no greater than 1.5 feet per second. The maximum design velocity of the larger storms should be kept low enough so as to avoid resuspension of deposited sediments. The 2-year storm recommended maximum design velocity is 4 feet per second and the 10-year storm recommended maximum design velocity is 7 feet per second.

Longitudinal Slope

The slope of the grassed swale should be as flat as possible, while maintaining positive drainage and uniform flow. The minimum constructable slope is between 0.75 and 1.0%. The maximum slope depends upon what is needed to maintain the desired flow velocities and to provide adequate storage for the water quality volume, while avoiding excessively deep water at the downstream end. Generally, a slope of between 1 and 3% is recommended. The slope should never exceed 5%.

Swale length

Swale length is dependent on the swale's geometry and the ability to provide the required storage for the water quality volume.

Swale Capacity

The capacity of the grassed swale is a combined function of the flow volume (the water quality volume) and the physical properties of the swale such as longitudinal slope and bottom width. By using the Manning equation or channel flow nomographs, the depth of flow and velocity for any given set of values can be obtained. The Manning's '*n*' value, or roughness coefficient, varies with the depth of flow and vegetative cover. An '*n*' value of 0.15 is appropriate for flow depths of up to 4 inches (equal to the grass height). The *n* value decreases to a minimum of 0.03 for grass swales at a depth of approximately 12 inches.

A grassed swale should have the capacity to convey the peak flows from the 10-year design storm without exceeding the maximum permissible velocities. (Note that a maximum velocity is specified for the 2-year and 10-year design storms to avoid resuspension of deposited sediments and other pollutants and to prevent scour of the channel bottom and side slopes.) The swale should pass the 10-year flow over the top of the check dams with 6 inches, minimum, of freeboard. As an alternative, a bypass structure may be engineered to divert flows from the larger storm events (runoff greater than the water quality volume) around the grassed swale. However, when the additional area and associated costs for a bypass structure and conveyance system are considered, it may be more economical to simply increase the bottom width of the grassed swale. It should then be designed to carry runoff from the 10-year frequency design storm at the required permissible velocity.

The longitudinal slope and the bottom width may be adjusted to achieve the maximum allowable velocity according to the Manning equation:

$$Q = \left[\frac{1.49}{n} r^{2/3} s^{1/2}\right] A$$

Equation 3.13-1
Manning Equation

Where:
Q = peak flow rate, cfs
n = Manning's roughness coefficient
r = hydraulic radius, ft. = A / wp
s = longitudinal slope of the channel
A = cross-sectional area of the channel, ft^2

The portion of the equation within the brackets represents the velocity of flow. **Equation 3.13-1** can be rewritten as:

$$Q = VA$$

Equation 3.13-2
Continuity Equation

Where:
Q = peak flow rate, cfs
V = flow velocity, ft/s = $\frac{1.49}{n} r^{2/3} s^{1/2}$
A = *cross-sectional area of the channel, ft^2.*

Additional guidance on the use of the Manning equation for the design of grassed swales is provided in the Virginia Erosion and Sediment Control Handbook (VESCH), 1992 edition.

Water Quality Volume

If a grassed swale is used as a conveyance channel, its purpose is to transport stormwater to the discharge point. However, the purpose of a water quality grassed swale is to slow the water as much as possible to encourage pollutant removal.

The use of check dams will create segments of the swale which will be inundated for a period of

time. The required total storage volume behind the check dams is equal to the water quality volume for the contributing drainage area to that point. However, the maximum ponding depth behind the check dams should not exceed 18 inches. To insure that this practice does not create nuisance conditions, an analysis of the subsoil should be conducted to verify its permeability.

Underlying Soil Bed - Water Quality Swales

An underlying engineered soil bed and underdrain system may be utilized in areas where the soils are not permeable and the swale would remain full of water for extended periods of time (creating nuisance conditions). This soil bed should consist of a moderately permeable soil material with a high level of organic matter: 50% sand, 20% leaf mulch, 30% top soil. The soil bed should be 30 inches deep and should be accompanied by a perforated pipe and gravel underdrain system.

In residential developments with marginal soils, it may be appropriate to provide a soil bed and underdrain system in all grassed swales to avoid possible safety and nuisance concerns.

Check Dams

The use of check dams in a grassed swale should be per the following criteria:

1. **Height –** A maximum height of 18 inches is recommended, and the dam height should not exceed one-half the height of the swale bank.

2. **Spacing –** Spacing should be such that the slope of the swale and the height of the check dams combine to provide the required water quality volume behind the dams.

3. **Abutments –** Check dams should be anchored into the swale wall a minimum of 2 to 3 feet on each side.

4. **Toe Protection –** The check dam toe should be protected with riprap placed over a suitable geotextile fabric. The size (D_{50}) of the riprap should be based on the design flow in the swale. Class A1 Riprap is recommended.

5. **Overflow –** A notch should be placed in the top of the check dam to allow the 2-year peak discharge to pass without coming into contact with the check dam abutments, or the abutments may be protected with a non-erodible material. Six inches of freeboard should be provided between the 10-year overflow and the top of the swale.

6. **Riprap check dams –** Rip rap check dams should consist of a VDOT No. 1 Open-graded Coarse Aggregate core keyed into the ground a minimum of 6 inches, with a Class A1 riprap shell.

7. **Filter fabric –** Filter fabric is required under riprap and gabion check dams.

8. **Driveway culvert weirs –** Where a driveway culvert is encountered, a ½ round corrugated metal pipe weir bolted to the concrete driveway headwall may be utilized as a check dam, or a timber check dam placed at least one foot upstream of the culvert opening.

Outlets

Discharges from grassed swales must be conveyed at non-erosive velocities to either a stream or a stabilized channel to prevent scour at the outlet of the swale. Refer to VESCH, 1992 edition for design procedures and specifications regarding outlet stabilization.

Inflow Points

Swale inflow points should be protected with erosion controls as needed (e.g., riprap, flow spreaders, energy dissipators, sediment forebays, etc.).

Vegetation

A dense cover of water-tolerant, erosion-resistant grass or other vegetation must be established. Grasses used in swales should have the following characteristics:

- a deep root system to resist scouring,
- a high stem density, with well-branched top growth,
- tolerance to flooding,
- resistance to being flattened by runoff, and
- an ability to recover growth following inundation.

Recommended grasses include, but are not limited to, the following: Kentucky-31 tall fescue, reed canary grass, redtop, and rough-stalked blue grass. Note that these grasses can be mixed.

The selection of an appropriate vegetative lining for a grassed swale is based on several factors including climate, soils, and topography. For additional information, refer to STD. & SPEC. 3.32: Permanent Seeding in VESCH, 1992 edition.

Erosion control matting should be used to stabilize the soil before seed germination. This protects the swale from erosion during the germination process. In most cases, the use of sod is warranted to provide immediate stabilization on the swale bottom and/or side slopes. Refer to STD. & SPEC. 3.33: Sodding in VESCH, 1992 edition for additional information.

Construction Specifications

Overall, widely accepted construction standards and specifications, such as those developed by the USDA Soil Conservation Service or the U. S. Army Corps of Engineers, should be followed where applicable. Further guidance can be found in the SCS Engineering Field Manual. Specifications for the work should conform to the methods and procedures specified for earthwork, concrete, reinforcing steel, woodwork and masonry, as they apply to the site and the purpose of the structure. The specifications should also satisfy any requirements of the local government.

Sequence of Construction

The construction of grassed swales should be coordinated with the overall project construction schedule. The swale may be excavated during the rough grading phase of the project to permit use of the excavated material as fill in earthwork areas. Otherwise, grassed swales should not be constructed or placed into service until the entire contributing drainage area has been stabilized. Runoff from untreated, recently constructed areas may load the newly formed swale with a large volume of fine sediment. This could seriously impair the swale's natural infiltration ability.

The specifications for construction of a grassed swale should state the following:

- the earliest point in progress when storm drainage may be directed to the swale, and
- the means by which this delay in use will be accomplished.

Due to the wide variety of conditions encountered among projects, each project should be evaluated separately evaluated to decide how long to delay use of the swale.

Excavation

Initially, the swale should be excavated to within one foot of its final elevation. Excavation to the finished grade should be deferred until all disturbed areas in the watershed have been stabilized or protected. The final phase of excavation should remove all accumulated sediment. When final grading is completed, the swale bottom should be tilled with rotary tillers or disc harrows to provide a well-aerated, highly porous surface texture.

Vegetation

Establishing dense vegetative cover on the swale side slopes and floor is required. This cover will not only prevent erosion and sloughing, but will also provide a natural means to maintain relatively high infiltration rates.

Selection of suitable vegetative materials and application of required fertilizer and mulch should be per VESCH, 1992 edition.

Materials

1. **Check dams** – Check dams shall be constructed of a non-erosive material such as wood, gabions, riprap, or concrete. All check dams shall be underlaid by filter fabric per Std. & Spec 3.19: Rip Rap of VESCH, 1992 edition.

   a. *Wood* - pressure treated logs or timbers, or water-resistant tree species such as cedar, hemlock, swamp oak or locust.

   b. *Gabions* - hexagonal triple twist mesh with PVC coated galvanized steel wire. The maximum linear dimension of the mesh opening shall not exceed 4.5 inches. The area of the mesh opening shall not exceed 10 square inches.

   Stone or riprap for gabions shall be sized according to **Table 3.13-2**. It shall consist of field stone or rough unhewn quarry stone. The stone shall be hard and angular and of a quality that will not disintegrate with exposure to water or weathering. The specific gravity of the individual stones shall be at least 2.5.

   Recycled concrete may be used if it has a density of at least 150 pounds per cubic foot and does not have any exposed steel or reinforcing bars.

   c. *Riprap* - all riprap shall conform with VESCH Std. & Spec 3.19: Riprap, and VDOT Standards for open graded course aggregate.

   d. *Concrete* - All concrete shall conform with VDOT or SCS specifications.

2. **Underlying soil medium** – The underlying soils should consist of the following:

   a. *Soil* - USDA *ML*, *SM*, or *SC*.

   b. *Sand* - ASTM C-33 fine aggregate concrete sand; VDOT fine aggreagate, grading A or B.

3. **Pea Gravel** – Pea gravel should consist of washed ASTM M-43; VDOT No. 8 Open-graded Course Aggregate.

4. **Underdrain** – An underdrain system below the swale bottom shall consist of the following:

   a. *Gravel* - AASHTO #7, ASTM M-43, VDOT No. 3 Open-graded Course Aggregate.

   b. *PVC Pipe* - AASHTO M-278, 4-inch rigid schedule 40, perforations of 3/8-inch diameter at 6-inch centers, 4 holes per row.

   c. *Filter fabric* - shall be per specifications found in VESCH, 1992 edition.

TABLE 3.13 - 2
Stone or Riprap Sizes for Gabion Baskets

Basket Thickness		Stone Size *(in.)*
(in.)	*(mm.)*	
6	150	3 - 5
9	225	4 - 7
12	300	4 - 7
18	460	4 - 7
36	910	4 - 12

Maintenance and Inspection Guidelines

Maintenance of grassed swales includes upkeep of the vegetative cover and preservation of the swale's hydraulic properties. Individual land owners can usually carry out the suggested maintenance procedures for the swale or the portion of the swale on their property. To ensure continued long term maintenance, all affected landowners should be made aware of their maintenance responsibilities, and maintenance agreements should be included in land titles.

The following maintenance and inspection guidelines are not intended to be all-inclusive. Specific swales may require other measures not discussed here. It is the engineer's responsibility for determining if any additional items are necessary.

Vegetation

A dense and vigorous grass cover should be maintained in a grassed swale. This will be simplified if the proper grass type is selected in the design. Periodic mowing is required to keep the swale operating properly. Grass should never be cut to a height less than 3 inches. Ideally, a grass stand of 6 inches is most effective. Stabilization and reseeding of bare spots should be performed, as needed.

Check Dams

Properly constructed check dams should require very little maintenance since they are made of non-erodible materials. Periodic removal of sediment accumulated behind the check dams should be performed, as needed.

Debris and Litter Removal

The accumulation of debris (including trash, grass clippings, etc.) in the swale can alter the hydraulics of the design and lead to additional maintenance costs. Debris can also alter the flow path along the swale bottom causing low flows to concentrate and result in erosion of the swale bottom. As with any BMP, frequent inspections by the land owner will help prevent small problems from becoming larger.

Sediment Removal

The sediment that accumulates within the swale should be manually removed and the vegetation reestablished. If accumulated sediment has clogged the surface pores of the swale, reducing or eliminating the infiltration capacity, then the surface should be tilled and restabilized. Drilling or punching small holes into the surface layer can be used instead of tilling, if desired.

FIGURE 3.13 - 3
Typical Check Dam Configurations

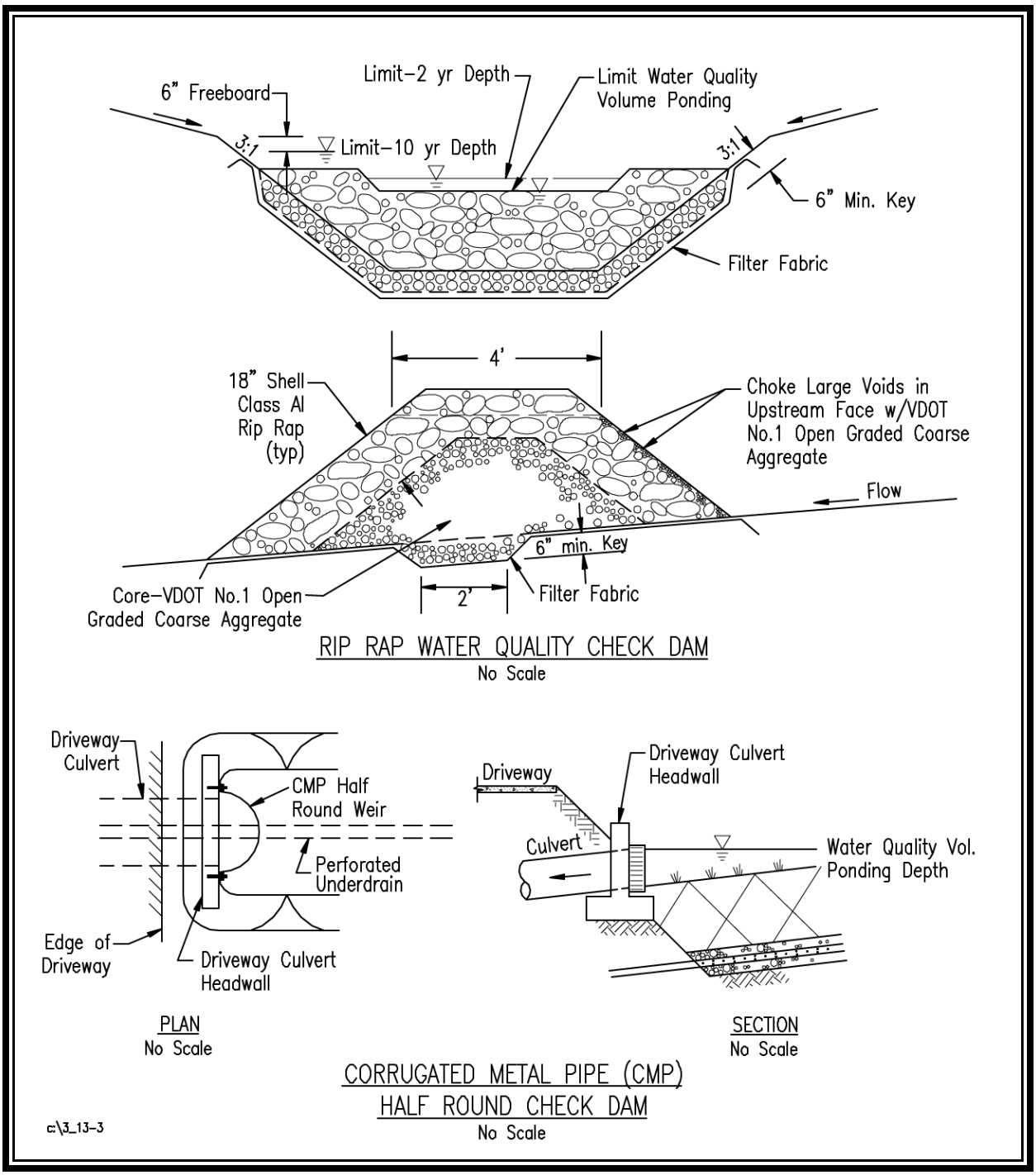

FIGURE 3.13 - 4
Manning's 'n' Values for Varying Depths of Flow

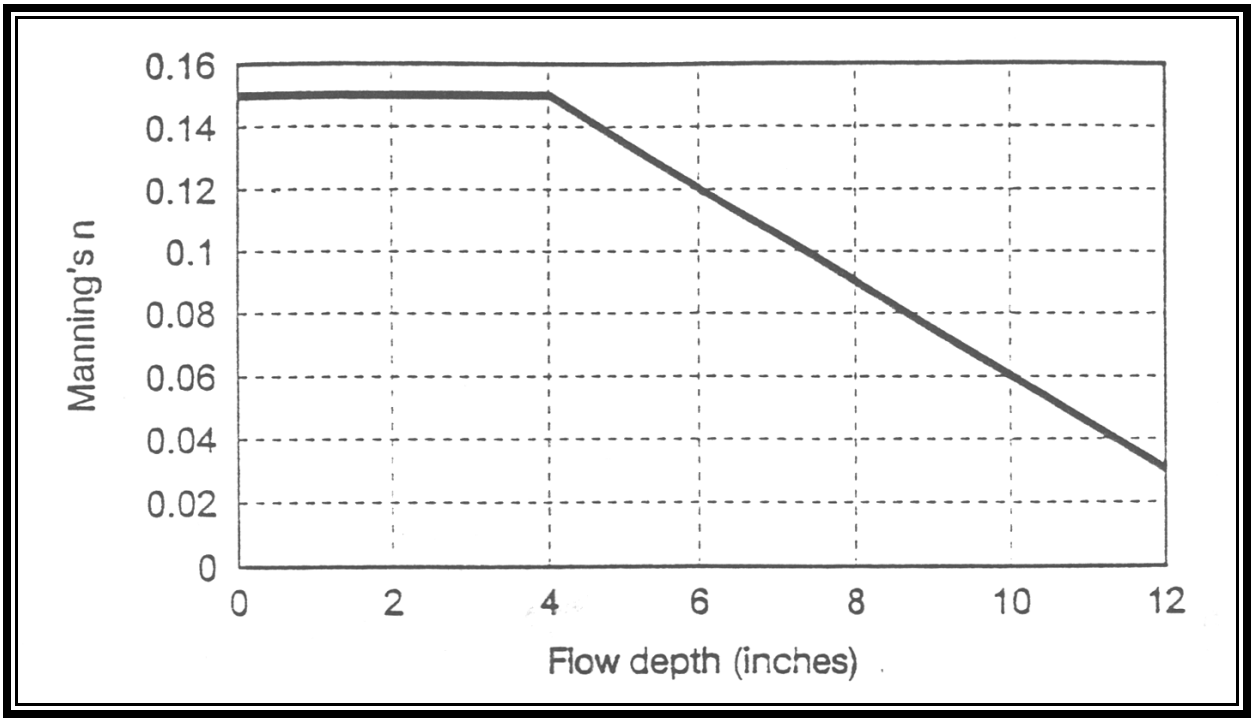

Design Procedures

The following design procedure represents a generic list of the steps typically required for the design of a *water quality grassed swale*.

1. Determine if the anticipated development conditions and drainage area are appropriate for a water quality grassed swale BMP.

2. Determine if the soils (permeability, bedrock, Karst, etc.) and topographic conditions (slopes, existing utilities, environmental restrictions) are appropriate for a grassed swale BMP.

3. Determine any additional stormwater management requirements (channel erosion, flooding) for the project.

4. Locate the grassed swale BMP(s) on the site.

5. Determine the hydrology and calculate the 2-year and 10-year peak discharges (**Chapter 4, Hydrologic Methods**), and the water quality volume for the contributing drainage area.

6. Approximate the geometry of the grassed swale and evaluate water quality parameters: water quality depth of flow (recommended maximum of 4 inches), and storage volume behind check dams (water quality volume). Adjust swale geometry and re-evaluate as needed.

7. Evaluate the grassed swale geometry for the the 2-year design storm peak discharge velocity (4 feet per second), and capacity (check dam overflow), and the 10-year design storm peak discharge velocity (7 feet per second) and capacity (6 inches of freeboard). (**Chapter 5, Engineering Calculations**). Adjust swale geometry and re-evaluate as needed.

8. Establish specifications for appropriate permenant vegetation on the bottom and side slopes of the grassed swale.

9. Establish specifications for sediment control.

10. Establish construction sequence and construction specifications.

11. Establish maintenance and inspection requirements.

REFERENCES

Arnold, J.A., ed., D.E. Line, S.W. Coffey, and J. Spooner. Stormwater Management Guidance Manual. Raleigh, North Carolina: North Carolina Cooperative Extension Service and North Carolina Division of Environmental Management, 1993.

Center for Watershed Protection. Design of Stormwater Filtering Systems. Silver Spring, Maryland: 1996

Chesapeake Bay Local Assistance Department. Chesapeake Bay Local Assistance Manual. Richmond, Virginia: 1989.

Galli, John. Analysis of Urban BMP Performance and Longevity. Washington, District of Columbia: Metropolitan Washington Council of Governments, 1992.

Hampton Roads Planning District Commission. Vegetative Practices Guide for Nonpoint Source Pollution Management. Chesapeake, Virginia: 1992.

Northern Virginia Planning District Commission and Engineers and Surveyors Institute. Northern Virginia BMP Handbook. Annandale, Virginia: 1992.

Schueler, T.R., P.A. Kumble, and M.A. Heraty. A Current Assessment of Urban Best Management Practices. Washington, District of Columbia: Metropolitan Washington Council of Governments 1992.

Virginia Department of Conservation and Recreation. Virginia Erosion and Sediment Control Handbook (VESCH). Richmond, Virginia: 1992.

Grass Swale. Note stone check dam in front of inlet creates shallow ponding area to encourage infiltration and settling.

Grass Swale through residential area. Note flat slope to encourage infiltration – ponding water gone within hours of runoff producing event.

Grassed Swale

Grass Swale with Check Dams. Note significant channel storage capacity created by check dams. Notched center allows safe overflow without scour around sides.

Grassed Swale

MINIMUM STANDARD 3.14

VEGETATED FILTER STRIP

View BMP Images

LIST OF ILLUSTRATIONS

#	FIGURES	PAGE
3.14-1	Vegetated Filter Strip	3.14-8
3.14-2	Level Spreader	3.14-9
3.14-3	Virginia Physiographic Regions	3.14-10
3.14-4	USDA Plant Hardiness Zones	3.14-11

#	TABLES	PAGE
3.14-1	Pollutant Removal Efficiencies for Vegetated Filter Strips	3.14-1

MINIMUM STANDARD 3.14

VEGETATED FILTER STRIP

Definition

A vegetated filter strip is a densely vegetated strip of land engineered to accept runoff from upstream development as *overland sheet flow*. It may adopt any naturally vegetated form, from grassy meadow to small forest.

Purpose

The purpose of a vegetated filter strip is to enhance the quality of stormwater runoff through filtration, sediment deposition, infiltration and absorption.

A vegetated filter strip may be used as a pretreatment BMP in conjunction with a primary BMP. This reduces the sediment and particulate pollutant load that could reaching the primary BMP, which, in turn, reduces the BMP's maintenance costs and enhances its pollutant removal capabilities.

TABLE 3.14 - 1
Pollutant Removal Efficiency for Vegetated Filter Strips

BMP	Target Phosphorus Removal Efficiency	Impervious Cover
Vegetated Filter Strip	10%	16 - 21%

Vegetated filter strips rely on their flat cross-slope and dense vegetation to enhance water quality. Their flat cross-slope assures that runoff remains as sheet flow while filtering through the vegetation. There is limited ponding or storage associated with these BMPs, so they are ineffective for reducing peak discharges. Vegetated filter strips may lower runoff velocities and, sometimes, runoff volume. Typically, however, the volume reduction is not adequate for controlling stream channel erosion or flooding.

Conditions Where Practice Applies

Drainage Area

A vegetated filter strip should not receive large volumes of runoff since such flows tend to concentrate and form channels. Channels within a filter strip allow runoff to short-circuit the BMP, rendering it ineffective. Therefore, the contributing drainage area for a vegetated filter strip is based on the linear distance behind it that is maintained as sheet flow. Runoff is assumed to change from sheet flow to shallow concentrated flow after traveling 150 feet over **pervious** surfaces and 75 feet over **impervious** surfaces (Center for Watershed Protection, 1996). A level spreader may be used to convert shallow concentrated flow from larger areas back to sheet flow before it enters the filter strip. In any event, the contributing drainage area should never exceed five acres.

Development Conditions

Vegetated filter strips have historically been used and proven successful on agricultural lands, primarily due to their low runoff volumes. In urban settings, filter strips are most effective in treating runoff from isolated impervious areas such as rooftops, small parking areas, and other small impervious areas. Filter strips should not be used to control large impervious areas.

Since vegetated filter strips should not be used to treat concentrated flows, they are suitable only for low- to medium-density development (16-21% impervious), or as a pretreatment component for structural BMPs in higher density developments.

Planning Considerations

Site Conditions

The following site conditions should be considered when selecting a vegetated filter strip as a water quality BMP:

1. **Soils –** Vegetated filter strips should be used with soils having an infiltration rate of 0.52 inches/hour; (sandy loam, loamy sand). Soils should be capable of sustaining adequate stands of vegetation with minimal fertilization.

2. **Topography –** Topography should be relatively flat to maintain sheet flow conditions. Filter strips function best on 5 percent or less (NVPDC).

3. **Depth of Water Table –** A shallow or seasonally high groundwater table will inhibit the opportunity for infiltration. Therefore, the lowest elevation in the filter strip should be at least 2 feet above the water table.

If the soil's permeability and/or depth to water table are unsuitable for infiltration, the filter strip's primary function becomes the filtering and settling of pollutants. A modified design may be provided to allow ponding of the water quality volume at the filter's downstream end. The ponding area may be created by constructing a small permeable berm using a select soil mixture. (For berm details, see the Pervious Berm section in this standard.) The maximum ponding depth behind the berm should be 1foot.

Water Quality Enhancement

Vegetated filter strips are occasionally installed as a standard feature in residential developments. To be used as a water quality BMP, however, filter strips must comply with certain design criteria. Vegetated filter strip designs should include specific construction, stabilization, and maintenance specifications. The most significant requirement is for runoff to be received as sheet flow. Certain enhancements may be necessary, such as added vegetation and grading specifications, or the use of level spreaders, to ensure that runoff enters the filter strip as sheet flow.

Sediment Control

A natural area that is designed to serve as a vegetated filter strip should not be used for temporary sediment control. Sediment deposition may have significant impacts on the existing vegetation. If a vegetated filter strip is proposed in a natural area marginally acceptable for use, due to topography or existing vegetation, then it may be appropriate to use the filter strip for temporary sediment control. However, when the project is completed, the sediment accumulation should be removed, the area should be regraded to create the proper design conditions (sheet flow), and the strip should be re-stabilized per the landscaping plan.

Design Criteria

This section provides recommendations and minimum design criteria for vegetated filter strips intended to enhance water quality. It is the designer's responsibility to decide which criteria are applicable to the each facility and to decide if any additional design elements are required. The designer must also provide for the long-term functioning of the BMP.

Hydrology

The hydrology of a filter strip's contributing drainage area should be developed per **Chapter 4, Hydrologic Methods**.

Filter Strip Geometry

Compliance with the following parameters will result in optimal filter strip performance (NVPDC):

1. **Length** – The minimum length of a filter strip should be 25 feet, at a maximum slope of 2 percent. The length should increase by 4 feet for any 1 percent increase in slope. **The optimum filter strip length is 80 to 100 feet**.

2. **Width** – The width of the filter strip (perpendicular to the slope) should be equal to the width of the contributing drainage area. When this is not practical, a level spreader should be used to reduce the flow width to that of the filter strip. The level spreader's width will determine the depth of flow and runoff velocity of the stormwater as it passes over the spreader lip and into the filter strip. A wide lip will distribute the flow over a longer level section, which reduces the potential for concentrated flow across the filter.

3. Slope – The slope of the filter strip should be as flat as possible while allowing for drainage. Saturation may occur when extremely flat slopes are used.

Level Spreader

A level spreader should be provided at the upper edge of a vegetated filter strip when the width of the contributing drainage area is greater than that of the filter (see Figure **3.14-2**.) Runoff may be directed to the level spreader as sheet flow or concentrated flow. However, the design must ensure that runoff fills the spreader evenly and flows over the level lip as uniformly as possible. The level spreader should extend across the width of the filter, leaving only 10 feet open on each end.

Pervious Berm

To force ponding in a vegetated filter strip, a pervious berm may be installed. It should be constructed using a moderately permeable soil such as ASTM *ML*, *SM*, or *SC*. Soils meeting USDA sandy loam or loamy sand texture, with a minimum of 10 to 25% clay, may also be used. Additional loam should be used on the berm (± 25%) to help support vegetation. An armored overflow should be provided to allow larger storms to pass without overtopping the berm. **Maximum ponding depth behind a pervious berm is 1 foot**.

Vegetation

A filter strip should be densely vegetated with a mix of erosion resistant plant species that effectively bind the soil. Certain plant types are more suitable than others for urban stormwater control. The selection of plants should be based on their compatibility with climate conditions, soils, and topography and the their ability to tolerate urban stresses from pollutants, variable soil moisture conditions and ponding fluctuations. Virginia has three major physiographic regions that reflect changes in soils and topography: Coastal Plain, Piedmont, and Appalachian and Blue Ridge regions (see **Figure 3.14- 3**).

A filter strip should have at least two of the following vegetation types:

- *deep-rooted grasses, ground covers, or vines*
- *deciduous and evergreen shrubs*
- *under- and over-story trees*

Native plant species should be used if possible. Non-native plants may require more care to adapt to local hydrology, climate, exposure, soil and other conditions. Also, some non-native plants may become invasive, ultimately choking out the native plant population. This is especially true for non-native plants used for stabilization.

Newly constructed stormwater BMPs will be fully exposed for several years before the buffer vegetation becomes adequately established. Therefore, plants which require full shade, are susceptible to winter kill or are prone to wind damage should be avoided.

Plant materials should conform to the American Standard for Nursery Stock, current issue, as published by the American Association of Nurserymen. The botanical (scientific) name of the plant species should be according to the landscape industry standard nomenclature. All plant material specified should be suited for USDA Plant Hardiness Zones 6 or 7 (see **Figure 3.14- 4**).

Construction Specifications

Overall, widely accepted construction standards and specifications, such as those developed by the USDA Soil Conservation Service or the U.S. Army Corps of Engineers, should be followed where applicable to construct a vegetated filter strip. The specifications should also satisfy all requirements of the local government.

Sequence of Construction

Vegetated filter strip construction should be coordinated with the overall project construction schedule. Rough grading of the filter strip should not be initiated until adequate erosion controls are in place.

Soil Preparation

Topsoil should be 8 inches thick, minimum. If grading is necessary, the topsoil should be removed and stockpiled. If the subsoil is either highly acidic or composed of heavy clays, ground dolomite limestone should be applied at an appropriate rate based on soil and slope conditions.

Subsoil should be tilled to a depth of at least 3 inches to adequately mix in soil additives and to permit bonding of the topsoil to the subsoil. If the existing topsoil is inadequate to support a densely vegetated filter strip, then suitable material should be imported. Proper specifications for imported topsoil should include the following:

1. *The USDA textural triangle classification.*

2. *Requirements for organic matter content (not less than 1.5% by weight), pH (6 to 7.5), and soluble salt (not greater than 500 parts per million).*

3. *Placement thickness and compaction. Topsoil should be uniformly distributed and compacted, and should have a minimum compacted depth of 6 to 8 inches.*

All seeding, fertilization, and mulching should be per the Virginia Erosion and Sediment Control Handbook (VESCH), 1992 edition, or as specified by a qualified agronomist.

Maintenance/Inspection Guidelines

Vegetated filter strips require regular maintenance. Field studies indicate that these BMPs usually have short life spans because of lack of maintenance, improper location, and poor vegetative cover.

The following maintenance and inspection guidelines are **NOT** all-inclusive. Specific facilities may require other measures not discussed here. It is the designer's responsibility to decide if additional measures are necessary.

Filter strips should be inspected regularly for gully erosion, density of vegetation, damage from foot or vehicular traffic, and evidence of concentrated flows circumventing the strip. The level spreader should also be inspected to verify that it is functioning as intended.

Inspections are critical during the first few years to ensure that the strip becomes adequately established. Maintenance is especially important during this time and should include watering, fertilizing, re-seeding or planting as needed.

Once a filter strip is well established and functioning properly, periodic maintenance, such as watering, fertilizing and spot repair, may still be necessary. However, fertilization efforts should be minimized. Natural selection allows certain species (usually native plants) to thrive while others decline. Excessive fertilization and watering to maintain individual plantings may prove costly, especially in abnormally dry or hot seasons. Overseeding and replanting should be limited to those species which have exhibited the ability to thrive.

To increase the functional longevity of a vegetated filter strip, the following practices are recommended:

- *Regular removal of accumulated sediment,*
- *periodic reestablishment of vegetation in eroded areas or areas covered by accumulated sediment,*
- *periodic weeding of invasive species or weeds, and*
- *periodic pruning of woody vegetation to stimulate growth.*

FIGURE 3.14 - 1
Vegetated Filter Strip

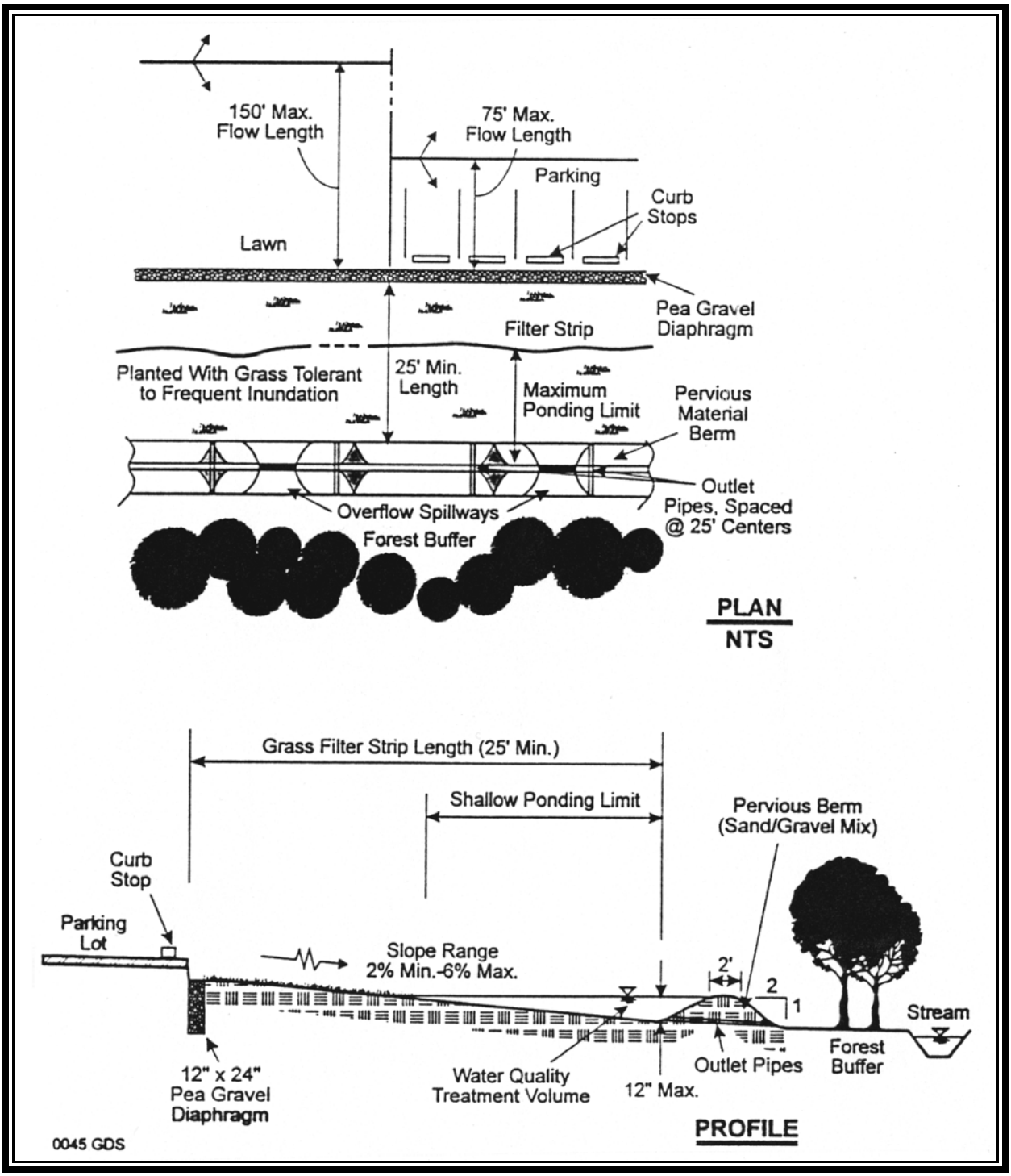

Source: Design of Stormwater Filtering Systems, Center for Watershed Protection,1996

FIGURE 3.14 - 2

Level Spreader

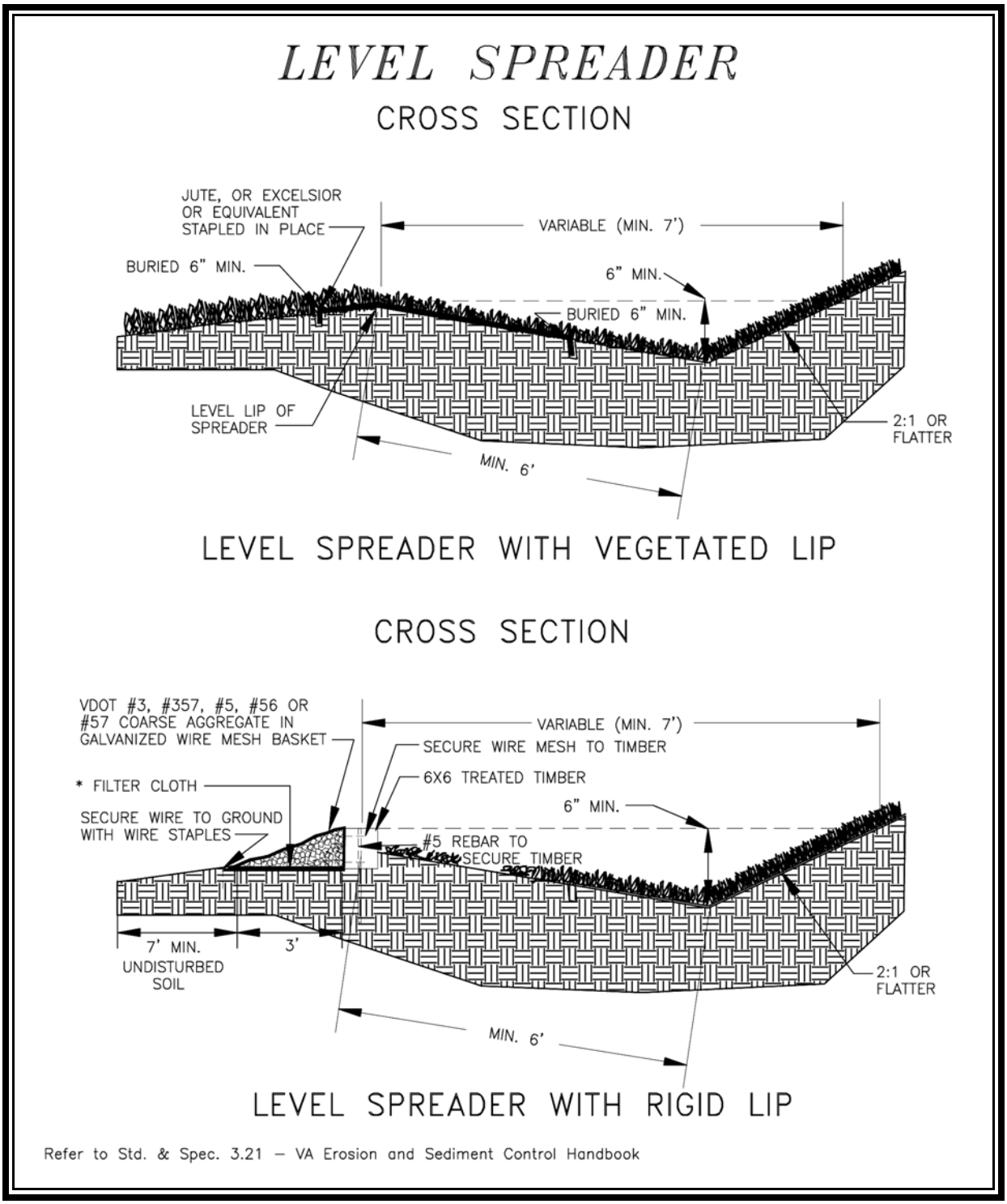

FIGURE 3.14 - 3
Virginia Physiographic Regions

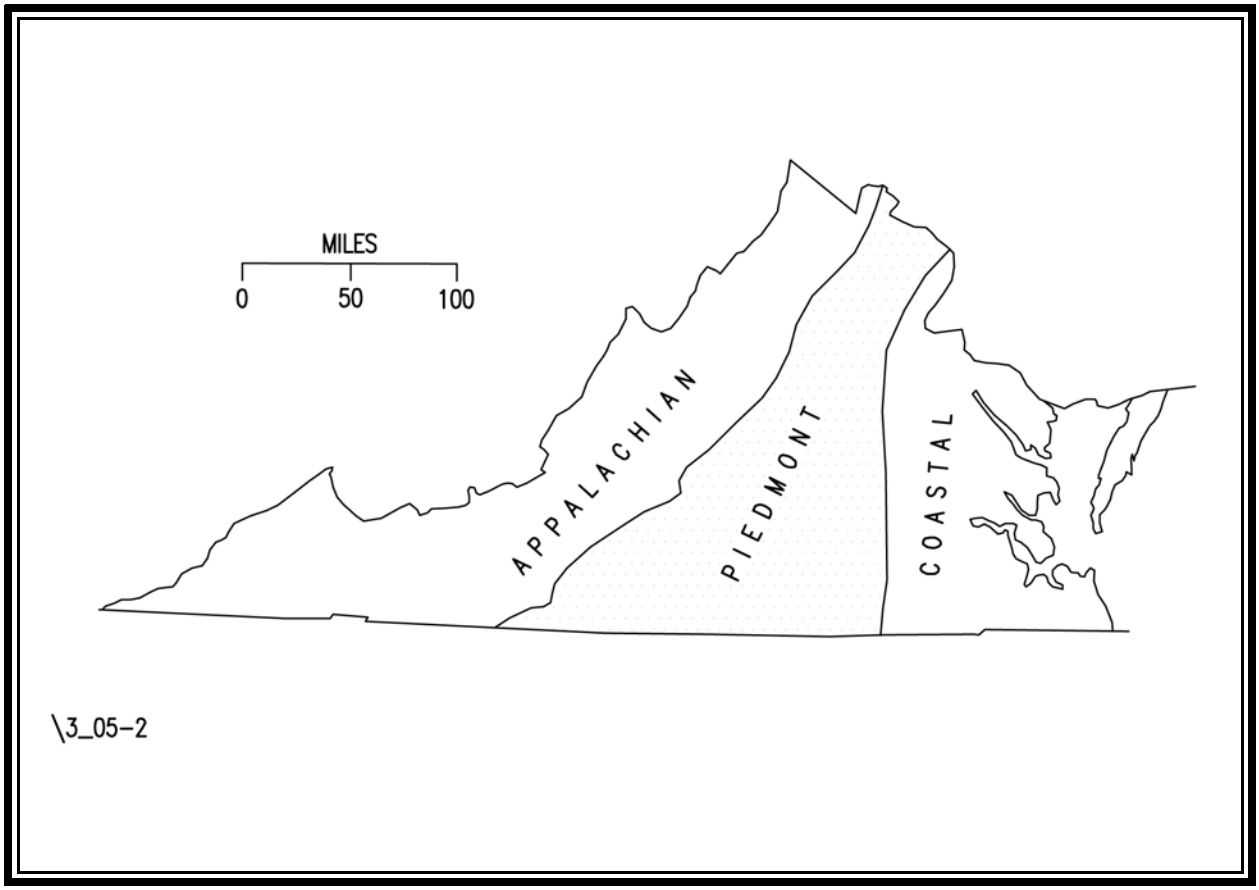

FIGURE 3.14 - 4
USDA Plant Hardiness Zones

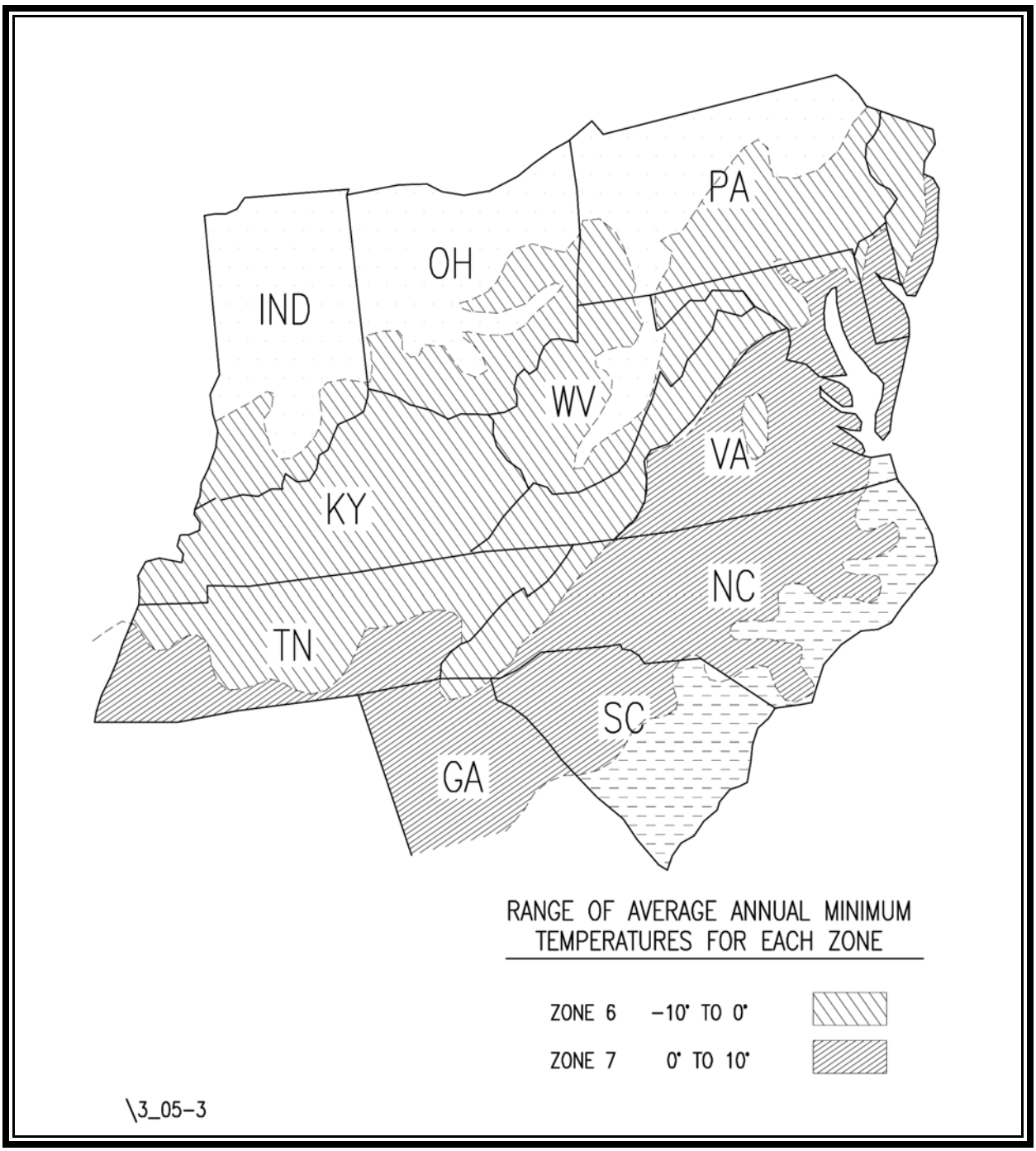

REFERENCES

Arnold, J.A., ed., D.E. Line, S. W. Coffey, and J. Spooner. Stormwater Management Guidance Manual. Raleigh, North Carolina: North Carolina Cooperative Extension Service and North Carolina Division of Environmental Management, 1993.

Chesapeake Bay Local Assistance Department. Chesapeake Bay Local Assistance Manual. Richmond, Virginia: 1989.

Chesapeake Bay Program. Water Quality Functions of Riparian Forest Buffer Systems in the Chesapeake Bay Watershed. Technology Transfer Report CBP/TRS 134/95. Annapolis, Maryland: 1995.

Dillaha, T.A., R.B. Reneau, S. Mostaghimi, and D. Lee. "Vegetative Filter Strips for Agricultural Nonpoint Source Pollution Control." Transactions of the American Society of Agricultural Engineers. Blacksburg, Virginia: 1989.

Galli, John. Analysis of Urban BMP Performance and Longevity. Washington, District of Columbia: Metropolitan Washington Council of Governments, 1992.

Hampton Roads Planning District Commission. Vegetative Practices Guide for Nonpoint Source Pollution Management. Chesapeake, Virginia: 1992.

Metropolitan Washington Council of Governments. Guidance Report 1: Riparian Buffer Programs, A Guide to Developing and Implementing a Riparian Buffer Program as an Urban Stormwater Best Management Practice. Washington, District of Columbia: 1993.

Northern Virginia Planning District Commission and Engineers and Surveyors Institute. Northern Virginia BMP Handbook. Annandale, Virginia: 1992.

Schueler, T. Level Spreader/Filter Strip System Assessed in Virginia. Watershed Protection Techniques, Vol. 1, No. 1. Silver Spring, Maryland: Center for Watershed Protection, 1994.

Schueler, T.R., P.A. Kumble, and M. A. Heraty. A Current Assessment of Urban Best Management Practices. Washington, District of Columbia: Metropolitan Washington Council of Governments, 1992.

Schueler, T. The Architecture of Urban Stream Buffers. Watershed Protection Techniques, Vol 1, No. 4. Silver Spring, Maryland: Center for Watershed Protection, 1995.

The Center for Watershed Protection. Design of Stormwater Filtering Systems. Silver Spring, Maryland: 1996.

Virginia Department of Conservation and Recreation. Virginia Erosion and Sediment Control Handbook. Richmond, Virginia: 1992.

Virginia Department of Forestry. Interim Report to the Chesapeake Bay Executive Council, EC Directive #94-1 Riparian Forest Buffers. Charlottesville, Virginia: 1995.

Wong, S.L. and R.H. McCuen. The Design of Vegetative Buffer Strips for Runoff and Sediment Control. Annapolis, Maryland: Tidewater Administration, Maryland Department of Natural Resources, 1982.

Vegetated Filter Strip. Note landscaped areas parallel to contours to force runoff to spread out. No evidence of channel flow short circuiting filter strip.

Vegetated Filter Strip

MINIMUM STANDARD 3.15

MANUFACTURED BMP SYSTEMS

3.15A	*Stormceptor*	3.15-7
3.15B	*Vortechs Stormwater Treatment System*	3.15-11
3.15C	*Downstream Defender*	3.15-15
3.15D	*StormTreat System*	3.15-19
3.15E	*StormFilter*	3.15-23
3.15F	*BaySaver Separation System*	3.15-27

View BMP Images

LIST OF ILLUSTRATIONS

#	FIGURES	PAGE
3.15-1	*Stormceptor* - Normal Flow Conditions	3.15-9
3.15-2	*Stormceptor* - High Flow Conditions	3.15-10
3.15-3	*Vortechs Stormwater Treatment System*	3.15-13
3.15-4	*Downstream Defender* - Section View	3.15-17
3.15-5	*Downstream Defender* - Plan View	3.15-18
3.15-6	*StormTreat System* Tank	3.15-21
3.15-7	*StormTreat System*	3.15-22
3.15-8	*StormFilter System*	3.15-25
3.15-9	*StormFilter Drop-in Filter*	3.15-26
3.15-10	*BaySaver Primary Separation Manhole*	3.15-29
3.15-11	*BaySaver Plan View*	3.15-30
3.15-12	*BaySaver Section A-A*	3.15-31
3.15-13	*BaySaver Separator Unit*	3.15-32

MINIMUM STANDARD 3.15

MANUFACTURED BMP SYSTEMS

The Manufactured BMP Systems presented in this standard have been presented to the Virginia Department of Conservation and Recreation (DCR) by industry manufacturers. DCR acknowledges that there may be additional Manufactured BMP Systems available at this time that are not presented in this handbook. Presentation of the following products does not preclude the use of other available systems, nor does it constitute endorsement of any one system. Additional BMP systems will be presented in Technical Bulletins as they become available.

Definition

A Manufactured BMP system is a structural measure which is specifically designed and sized by the manufacturer to intercept stormwater runoff and prevent the transfer of pollutants downstream.

Purpose

Manufactured BMP systems are used solely for water quality enhancement in urban and ultra-urban areas where surface BMPs are not feasible. These are flow-through structures in that the design rate of flow into the structure is regulated by the inflow pipe or structure hydraulics as opposed to traditional BMPs designed to store the entire water quality volume. When the maximum design inflow is exceeded, the excess flow bypasses the structure or flows through the structure and bypasses the treatment with minimal turbulence and resuspension of previously trapped pollutants. Structures that rely on the inflow pipe to regulate the rate of flow into the treatment chamber typically cause stormwater to back up into the upstream conveyance system or associated storage facility. Depending on the type of structure and the configuration of the conveyance system, this excess flow will either bypass the treatment chamber or be attenuated and allowed to flow through the treatment chamber at the regulated rate.

Pollutant removal efficiencies presented in this standard are based upon currently available studies. Removal efficiencies are very variable, however, and highly dependant on storm size, influent pollutant concentrations, and rainfall intensity. Several monitoring studies are ongoing and many products may be modified to improve pollutant removal performance. Therefore, the removal efficiencies presented may be subject to change. As more of these products are built and additional monitoring studies track their performance over a wide range of rainfall events, the anticipated performance of these systems as water quality BMPs will become better established.

The discussion of each of the manufactured BMP systems presented in this standard includes the target pollutants for which the BMP was designed. Many of these systems were developed to remove a specific range of particulate pollutants, or total suspended solids (TSS), from stormwater runoff. Others, such as the filtering structures discussed below, were developed to capture a broad range of pollutants. The use of phosphorus as the target or "keystone" pollutant is recommended when using the *performance-based* water quality criteria to select a BMP. However, for stormwater "hot-spots", or areas from which a high concentration of urban pollutants can be expected, the primary pollutant of concern may be hydrocarbons (oil and grease), metals, or other compounds besides nutrients. Manufactured BMPs generally provide effective spill containment for material handling and transfer areas such as automobile fuel and service areas, and other urban hot-spots. Careful analysis of the proposed development project and intended uses help in selecting and appropriate BMP.

The manufactured BMP systems which have been evaluated at this time can be categorized as either:

- **Hydrodynamic Structures** - (*Stormceptor, Vortechs Stormwater Treatment System, Downstream defender, BaySaver Separation System*)

- **Filtering Structures** - (*StormFilter, StormTreat System*)

Hydrodynamic Structures

Hydrodynamic structures are those which rely on settling or separation of pollutants from the runoff. The hydrodynamic structures can be generally categorized as Chambered Separation Structures or Swirl Concentration Structures.

<u>Chambered Separation Structures</u> rely on settling of particles and, to a lesser degree, centrifugal forces to remove pollutants from stormwater. These structures contain an upper bypass chamber and a lower storage/separation chamber. Flow enters the structure in the upper bypass chamber and is channeled through a downpipe into the lower storage/separation, or treatment, chamber. The downpipe is configured such that when the rate of inflow into the structure exceeds its operating capacity, the flow simply "jumps" over the downpipe, bypassing the lower treatment chamber.

The outlet configuration of the downpipe forces the water to enter the lower treatment chamber in one direction, which encourages circular flow. This circular flow, as well as gravitational settling, traps the sediments and other particulate pollutants (as well as any pollutants which adsorb to the particulates) at the bottom of the chamber. The water leaves the treatment chamber through a return or riser pipe. The return or riser pipe extends below the water surface within the lower treatment chamber in order to prevent trapped floatables from exiting the structure. The hydraulic gradient of the structure prevents the inflow and the discharge from creating turbulent conditions within the lower treatment chamber. This feature helps prevent the resuspension of previously trapped particulate pollutants during high flow, or "bypass", storm events.

Swirl Separation Structures are characterized by an internal component that creates a swirling motion. This is typically accomplished by a tangential inflow location within a cylindrical chamber. The "swirl" technology is similar, if not identical to, the technology used in treating combined sewer overflows. The solids settle to the bottom and are trapped by the swirling flow path. Additional compartments or chambers act to trap oil and other floatables.

There is no bypass for larger flows prior to the treatment or swirl chamber. The larger flows simply pass through the structure untreated. However, due to the swirling motion within the structure, larger flows do not resuspend previously trapped particulates.

Filtering Structures

Filtering structures are characterized by a sedimentation chamber and a filtering chamber. The manufactured systems presented in this standard, the *StormFilter* and the *StormTreat System*, use very different configurations and filtering media. Both contain a primary settling chamber to remove heavy solids, floatables, oil, etc. The *StormTreat System* then directs the water through a series of screens and geotextile filters and into a containerized wetland system with soil and aquatic plants. The *StormFilter*, on the other hand, uses any one or combination of filter media cartridges. The filter media selected is typically based on the target pollutants to be removed or the desired efficiency. The number of cartridges is dependent on the project size, desired removal efficiency, and peak flow rates.

These categories represent the general groupings of manufactured systems that have been presented to DCR to date. More systems may be added in the future as they become available.

TABLE 3.15-1
Pollutant Removal Efficiencies for Manufactured BMPs

Type	Target Phosphorus Removal Efficiency*
Hydrodynamic Structures (*Stormceptor, Vortechs, Downstream Defender, BaySaver*)	15% - 20%
Filtering Structures (*StormFilter, StormTreat System*)	50%

*Pollutant removal efficiencies are subject to change pending monitoring results.

Conditions Where Practice Applies

Drainage Area

The sizing criteria for each manufactured BMP system should be obtained from the manufacturer to insure that the latest design and sizing criteria is used. In general, the flow-through configuration and treatment limitations will force drainage areas to remain relatively small.

Development Conditions

Manufactured BMP systems are ideal for use in ultra-urban areas since they are space efficient. Most of these systems can be placed under parking lots, or simply installed as a manhole junction box or inlet structure. Since other BMPs, such as sand filters and bioretention structures, are also suited for urban development, the designer must consider the type of pollutant load anticipated from the site, as well as other site factors, such as maintenance, aesthetics, etc., and select an appropriate BMP. In general, hydrodynamic are recommended for the following:

- Pretreatment for other BMPs;
- Retrofit of existing development or Redevelopment; and
- Ultra-urban development areas.

Filtering structures are generally recommended for use in applications similar to General Intermittent Sand Filters (**Minimum Standard 3.12**) and Bioretention Filters (**Minimum Standard 3.11**).

In all cases, Manufactured BMP systems must be designed in accordance with the manufacturers specifications.

Planning Considerations

The most significant feature of manufactured BMP systems is their small size and the ability to use them as retrofits underneath improved areas. (It should be noted that other BMPs, such as sand filters, can also be placed under improved areas.) The fact these BMPs are underground requires the designer to locate an acceptable outfall or improved drainage system for discharging runoff. The vertical elevation of the inflow and outflow pipe connections may be critical to the choice, or design, of the BMP.

Overflow

All of the manufactured BMP systems presented in this standard are flow-through structures that can be located on storm drainage systems that drain improved areas. Most manufactured systems, however, are designed to treat the first flush, or the water quality volume, of runoff. Therefore, an overflow, or bypass, is needed to divert flow that exceeds the design rate, or a storage facility is needed to store the appropriate volume of runoff for treatment. The discussion of each manufactured system will include the overflow or bypass provisions provided, or required.

Design Criteria

The design criteria for manufactured BMP systems should be obtained from the manufacturer. All designs should be reviewed by the manufacturer to insure that the system is appropriately designed and sized.

Maintenance and Inspections

All manufactured BMP systems require regular inspection and maintenance to maximize their effectiveness. The specific maintenance requirements and schedule should be prepared by the manufacturer and signed by the owner/operator. It should be noted that the frequency of maintenance is not only dependent on the type of manufactured system chosen, but also the pollutant load from the contributing drainage area. The frequency of maintenance required may vary from after any major storm, to once a month, to up to twice a year.

A maintenance log should be required to keep track of routine inspections and maintenance. A maintenance log can also help facility owners establish the effectiveness of certain “housekeeping” practices, such as street sweeping. Failure to maintain any stormwater BMP may result in reduced efficiency, resuspension or mixing of previously trapped pollutants, or clogging of the system.

Many suppliers of manufactured BMP systems recommend service contracts to ensure that maintenance occurs on a regular basis. Lack of maintenance is widely acknowledged to be the most prevalent cause of failure of both structural and non-structural BMPs.

Another consideration with manufactured BMP systems is the possible contamination and toxicity of trapped sediments, especially in areas considered to be stormwater hot-spots. Care must be taken in the disposal of sediment that may contain accumulations of heavy metals. Sediment testing is recommended prior to sediment removal to assure proper disposal. Experience in other jurisdictions has indicated a reluctance to on the part of waste water utility operators to accept the pump-out

material from these structures. Landowners are encouraged to research the disposal options as part of the planning process prior to selecting the BMP.

MINIMUM STANDARD 3.15A

STORMCEPTOR

Description

Stormceptor is a precast, modular, vertical cylindrical tank, which is divided into an upper bypass chamber and a lower storage/separation chamber. Under normal design flow operating conditions flow enters the structure through the upper chamber and is diverted by a U-shaped weir through a downpipe and into the lower separation/holding, or treatment, chamber. The downward flow is redirected horizontally around the circular walls of the separation chamber by a tee-fitting on the downpipe outlet. This circular flow, as well as gravitational settling, traps sediments and other particulate pollutants (as well as any pollutants which adsorb to the particulates) at the bottom of the chamber.

Water exits the lower chamber through a submerged outlet riser pipe. The bottoms of the inlet downpipe and the outlet riser pipe are submerged and set at the same elevation (the elevation that provides the oil/floatable storage above the pipes, and the solids/sediment storage below the pipes). The submerged outlet riser pipe prevents trapped floatables from exiting the structure. This configuration prevents the inflow and discharge from creating turbulent flow conditions within the lower treatment chamber, thus avoiding resuspension and export of previously trapped pollutants during high flow, or "bypass," storm events.

There are no moving parts and no external power requirements for the *Stormceptor*.

Overflow – During-high flow periods, stormwater floods over the diversion weir and continues through the upper bypass chamber into the downstream sewer. This rapid activity creates pressure equalization across the bypass chamber, thus decreasing the flow through the lower treatment chamber, and preventing scour and resuspension of previously trapped materials.

Hydraulics – The overflow of the system is controlled by the incoming velocity and the hydraulics of the diversion weir. This system will cause a slight backwater condition in the upstream conveyance system.

Planning Considerations

Stormceptor is precast and comes in various sizes and is designed for all types of land uses. The system is engineered for traffic loading and can be installed as a manhole structure on an existing system (as a retrofit) or on a new system where water quality enhancement is required.

Target Pollutants – *Stormceptor* is designed to capture sediment, total suspended solids (TSS), trash, organic material, and floatable oil and grease. In addition, many other urban pollutants which adsorb to sediments and particulates can also be trapped by the structure.

Design Criteria

The design criteria for the *Stormceptor* should be obtained from the manufacturer. All designs should be reviewed by the manufacturer to insure that the system is appropriately designed and sized.

Maintenance and Construction

It is generally recommended that the system be maintained (full pump-out) once per year. This frequency may have to be adjusted to a shorter interval once loading rates are determined. Regular inspections will help determine the required frequency of cleaning. More frequent inspections are appropriate where oil spills occur regularly. Maintenance is completed using a conventional vacuum truck.

Contact:

Mr. Vince Berg, P.E.
Stormceptor Corporation
600 Jefferson Plaza
Suite 304
Rockville, Maryland 20852
Phone: 1-800-762-4703

FIGURE 3.15-1
Stormceptor - Normal Flow Conditions

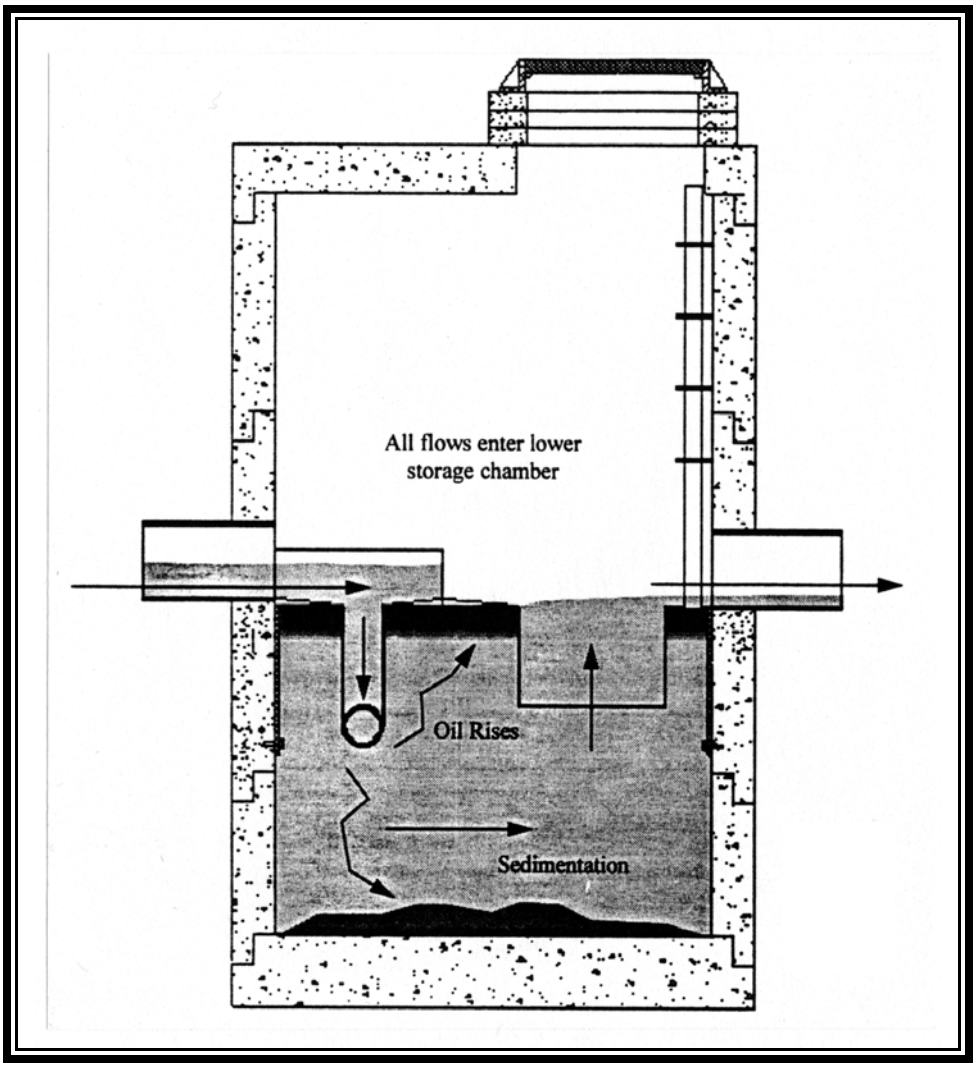

FIGURE 3.15-2
Stormceptor - High Flow Conditions

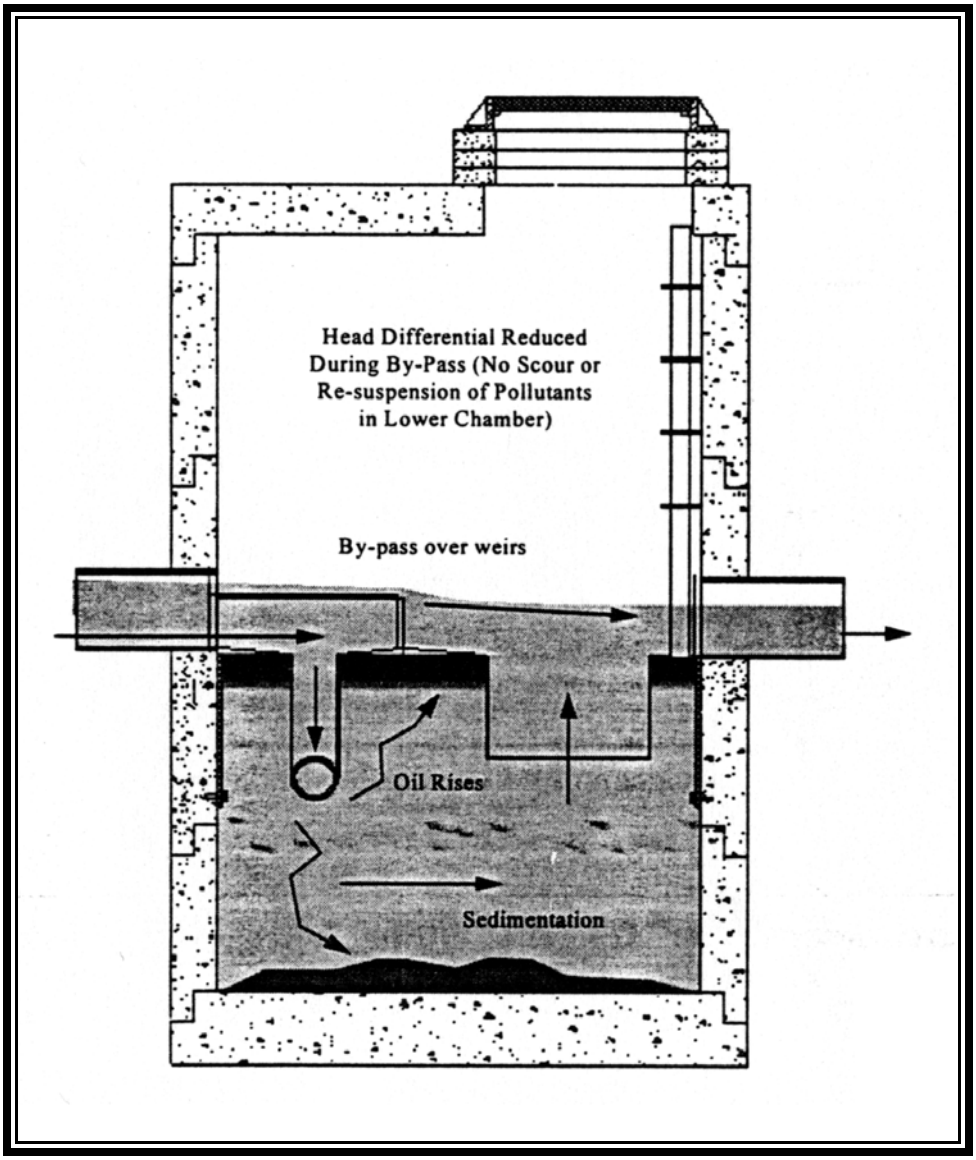

MINIMUM STANDARD 3.15B

VORTECHS STORMWATER TREATMENT SYSTEM

Description

The *Vortechs Stormwater Treatment System* is a precast rectangular unit with three chambers. The first chamber is referred to as the grit chamber and consists of a 1/4-inch thick aluminum cylinder with openings to release water at a controlled rate. The flow enters this chamber at a tangent to create a swirling motion that directs settlable solids towards the center. The flow is slowly released from the swirl concentrator into the oil chamber. The oil chamber has a barrier which traps oil and grease and other floatables. The final chamber is the flow control chamber, which forces water to back up in the structure, this reducing the inflow velocities and turbulence.

There are no moving parts and no external power requirements for the *Vortechs System.*

Overflow - As the rate of runoff increases, the flow control chamber forces the runoff to fill the *Vortechs* structure. As this occurs, the swirling action in the grit chamber increases, keeping sediments and other material concentrated at the center of the chamber. The flow will back up to a level established by the elevation of the release openings within the overflow chamber. This provides the ability to achieve flow attenuation within the storage capacity of the upstream storm drainage system. If additional flow attenuation or quantity controls are needed, the elevation of the *Vortechs System* can be manipulated to back up water into a detention facility. Because the swirling action increases as the inflow velocity increases, resuspension of previously deposited material during high flows is eliminated.

Hydraulics - The hydraulics of the *Vortechs System* allow for the treatment of runoff from frequent storms as well as the flow from larger, less frequent storms. Larger storms will cause runoff to back up in the drainage system as the storage volume within the structure is above the inflow pipes.

Planning Considerations

The *Vortechs Stormwater Treatment System* is precast and comes in various sizes and is designed for all types of land uses. The system can be engineered for traffic loading, and depending on the invert elevations can be installed on an existing pipe system (as a retrofit) or on a new system where water quality enhancement is required.

Target Pollutants – The *Vortechs System* is designed to capture sediment as fine as clay sized particles, and the nutrients and metals that adhere to sediments. Also targeted are floating materials, including petroleum products.

Design Criteria

The design criteria for the *Vortechs System* should be obtained from the manufacturer. All designs should be reviewed by the manufacturer to insure that the system is correctly designed and sized.

Maintenance and Inspections

The *Vortechs System* has no ongoing maintenance requirements, although routine inspections are necessary to schedule cleaning. To insure proper performance and treatment efficiency, the system must be cleaned out when it is full. The rate at which the system accumulates contaminants is largely dependent upon site activities.

The first year of operation, Vortechnics recommends monthly inspections during periods of heavy contaminant loadings (e.g., winter sanding, soil disturbances, etc.). The inspection schedule can then be modified in subsequent years according to experience.

Clean-out of the *Vortechs System* with a vacuum truck is generally the best and most convenient method. Only the manhole cover above the grit chamber (the one farthest from the system outlet) needs to be opened to remove water and contaminants. As the grit chamber is pumped out, the oil and water drain back into it, so that oil scum, particulates and floatables are removed along with accumulated sediments. A pocket of water between the grit chamber and the flow control chamber seals the bottom of the oil barrier and prevents the loss of floatables to the outlet during cleaning.

Contact:

Tom Adams
Vortechnics
41 Evergreen Drive
Portland, ME 04103-1074
Phone: (207) 878-3662

FIGURE 3.15-3
Vortechs Stormwater Treatment System - Model # 9000

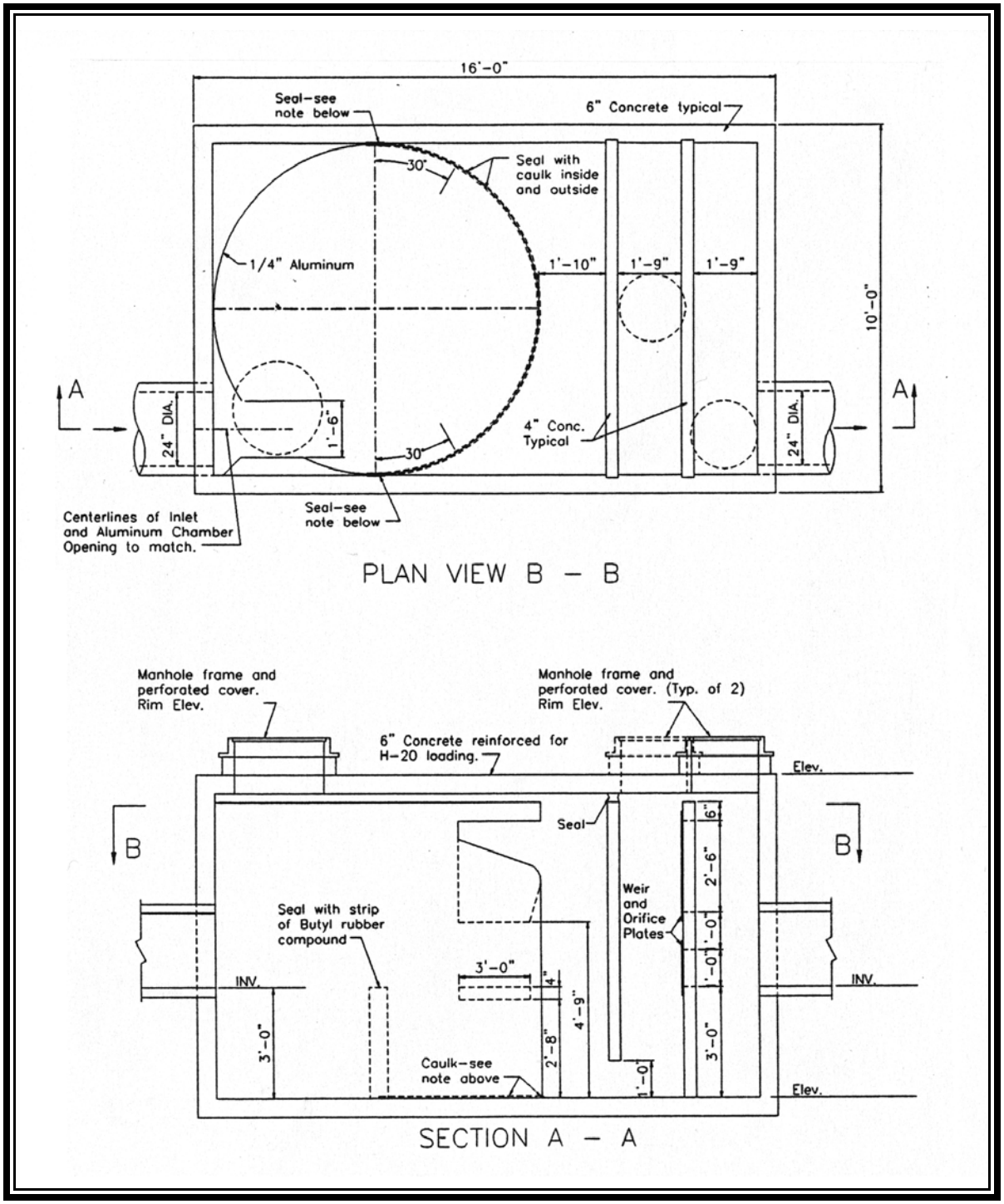

MINIMUM STANDARD 3.15C

DOWNSTREAM DEFENDER

Description

The *Downstream Defender* consists of a concrete cylindrical structure with stainless steel internal components and a internal sloping base. Stormwater runoff enter the structure through a tangential inlet pipe which creates a swirling motion within the structure. The flow spirals down the perimeter of the structure, allowing heavier particles to settle out by gravity and drag forces exerted on the wall and base of the structure.

The base of the *Downstream Defender* is formed at a 30 degree angle. As the flow rotates about the vertical axis, solids are directed towards the base of the structure where they are stored in the collection facility. The steel internal components direct the main flow away from the perimeter and back up the middle of the vessel as a narrower spiraling column rotating at a slower velocity than the outer downward flow.

A dip plate is suspended from the underside of the component support frame. This dip plate serves two purposes: 1) it locates the shear zone, (the interface between the outer downward circulation and the inner upward circulation where a marked difference in velocity encourages solid separation), and 2) it establishes a zone between it and the outer wall where floatables, oil and grease are captured and retained after a storm. When the flow reaches the top of the structure, it is virtually free of solids and is discharged through the outlet pipe.

There are no moving parts and no external power requirements for the *Downstream Defender.*

Overflow - There is no overflow or bypass of larger storms. As the rate of runoff increases, the swirling motion keeps the sediments trapped in the collection facility, thus allowing the full range of storms to pass through the facility with minimum resuspension.

Hydraulics - The outlet flow from the *Downstream Defender* can be regulated with its associated valve, the *Reg-U-Flow Vortex Valve*. The valve can be adjusted to maximize the available storage in the upstream drainage system or upstream detention facility (if additional flow attenuation is required) by reducing the flow and backing the water up in the upstream system.

Planning Considerations

A drop structure upstream of the *Downstream Defender* may be required to ensure that the flow enters into the structure at the appropriate elevation. The *Downstream Defender* comes in various sizes and is designed for all types of land uses. Depending on existing pipe invert elevations it can be installed on an existing pipe system (as a retrofit) or in a new system where water quality enhancement is required.

Target Pollutants – The *Downstream Defender* is designed to capture sediments, and grit (TSS), as well as floatable materials, including petroleum products. In addition, pollutant which adsorb to the particulates can also be trapped.

Design Criteria

The design criteria for the *Downstream Defender* should be obtained from the manufacturer. All designs should be reviewed by the manufacture to insure that the system is correctly designed and sized.

Maintenance and Inspections

A simple sump-vac procedure is periodically required to remove floatables and solids from the *Downstream Defender* collection facility. Regular inspections should be carried out over the first 12 months of operation to determine the rate of sediment and floatables accumulation. A probe may be used after storm events to determine the sediment depth in the collection facility. This information can then be used to establish a maintenance schedule. H.I.L. Technology, Inc. recommends inspection and clean-out at least twice a year.

A standard septic tank hose is not appropriate for the clean-out procedure. A *Vacall* with a 6-inch, or larger, hydraulic hose is required. The *Vacall* is capable of loosening compacted solids by reversing the vacuum pump prior to the sump- vac procedure.

Floatables should be removed prior to emptying the collection facility. The floatables access port is located between the concrete vessel wall and the dip plate. The collection facility access port is located directly over the center shaft.

Contact:

H.I.L. Technologies, Inc.
94 Hutchins Drive
Portland, ME 04102
Phone: 1-800-848-2706

FIGURE 3.15-4
Downstream Defender - Section View

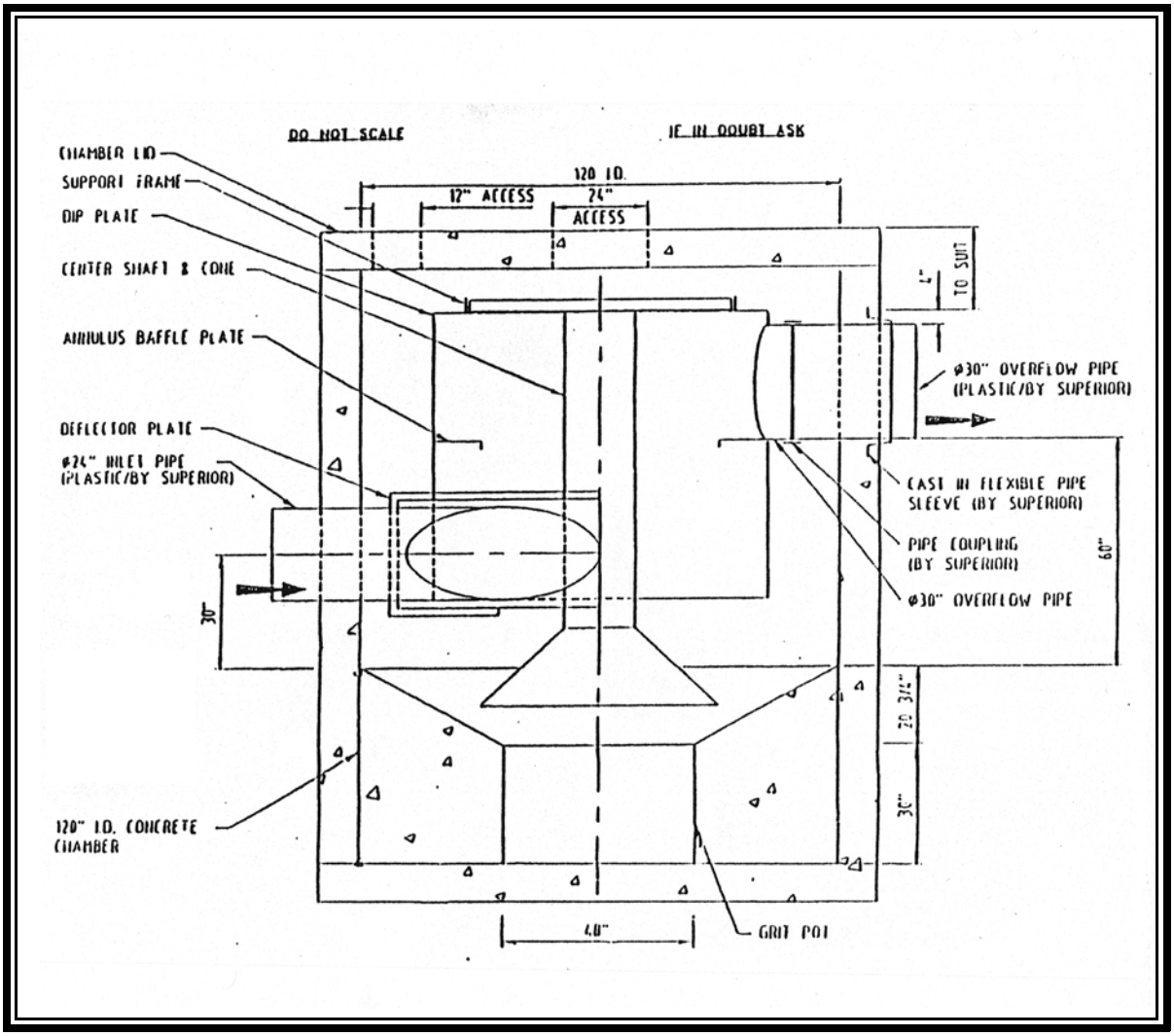

FIGURE 3.15-5
Downstream Defender - Plan View

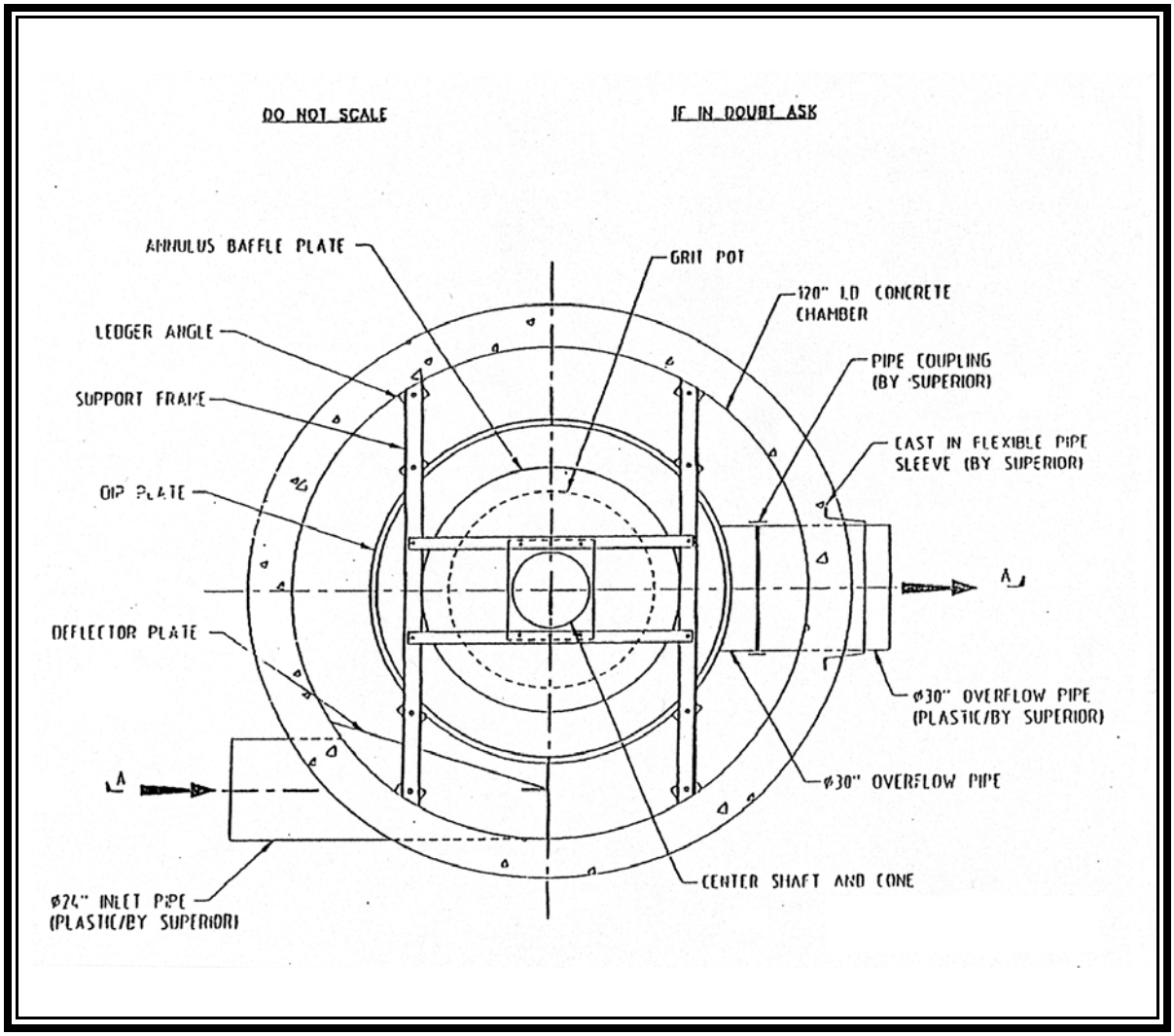

MINIMUM STANDARD 3.15D

STORMTREAT SYSTEM

Description

The *StormTreat System* captures and treats the first flush of runoff. An optional infiltration feature provides for the treatment of larger quantities of stormwater (beyond the first flush).

The system consists of a series of six sedimentation chambers and a constructed wetland which are contained within a modular 9.5-foot diameter tank. It is constructed of recycled polyethylene, which connects directly to existing drainage structures.

As stormwater enters the system, it is piped into sedimentation chambers where larger-diameter solids are removed. The internal sedimentation chambers contain a series of skimmers which selectively decant the upper portions of the stormwater in the sedimentation basins, leaving behind the more turbid lower waters. The skimmers significantly increase the separation of solids, as compared to conventional settling/detention basins. An inverted elbow trap serves to collect floatables, such as oils, within the inner tank. After moving through the internal chambers, the partially treated stormwater passes into the surrounding constructed wetland through a series of slotted PVC pipes.

The wetland is comprised of a gravel substrate planted with the bulrushes and other wetland plants. Unlike most wetlands constructed for stormwater treatment, the *StormTreat System* conveys stormwater into the subsurface of the wetland and through the root zone, where greater pollutant attenuation occurs through such processes as filtration, absorption, and biochemical reactions.

Precipitation of metals and phosphorus occurs within the wetland substrate, while biochemical reactions, including microbial decomposition, provide treatment of the stormwater prior to discharge through the outlet valve. An outlet control valve provides a variable holding time within the system and can be closed to contain a hazardous waste spill.

There are no moving parts and no external power requirements for the *StormTreat System*.

Overflow - There is no internal, large storm bypass within the *StormTreat System*. An overflow of the treated water is provided and is conveyed to a receiving channel or pipe system, or as option, the overflow can be directed into he surrounding soils for infiltration (if the soils meet the criteria for infiltration facilities - **Minimum Standard 3.10**). This feature can be enhanced by backfilling the excavation around the StormTreat System with 3/4" stone, similar to an infiltration trench with the StormTreat system providing pretreatment.

The flow into the *StormTreat System* is be regulated by the inflow pipe. A storage structure or basin may be used to temporarily hold the runoff until it can drain into the *StormTreat System*.

Hydraulics – The flow through the various filtering mediums is slow and, therefore, the backwater effects are high for this system. Flow through the system is gravity dependent such that a 4-foot difference in elevation is needed from the pavement surface to the discharge point. This may prove difficult on relatively flat sites.

Planning Considerations

The *StormTreat System* can be configured in clusters of tanks to fit within limited areas and is designed for all types of land uses. The manufacturer recommends that a sump catch basin be placed prior to the StormTreat System in order to trap larger diameter sediments.

Target Pollutants – The *StormTreat System* is designed to capture sediment (TSS), fecal coliform bacteria, total petroleum hydrocarbons, total dissolved nitrogen, total phosphorus, lead, chromium, and zinc.

Design Criteria

The design criteria for the *StormTreat System* should be obtained from the manufacturer. All designs should be reviewed by the manufacturer to insure that the system is designed and sized correctly.

Maintenance and Inspections

The *StormTreat System* requires minimal maintenance. Annual inspection is recommended to insure the system is operating effectively. During inspection the manhole should be opened, the burlap grit screening bag covering the influent line should be removed and replaced, and filters should be removed, cleaned, and reinstalled. Sediment should be removed from the system via suction pump once every 3 to 5 years, depending on local soil characteristics and catch basin maintenance practices.

Contact:
Mr. Scott Horsley
StormTreat Systems Inc.
90 Route 6A
Sextant Hill, Unit 1
Sandwich, MA 02563
ph. (508) 833-1033

FIGURE 3.15-6
StormTreat System Tank

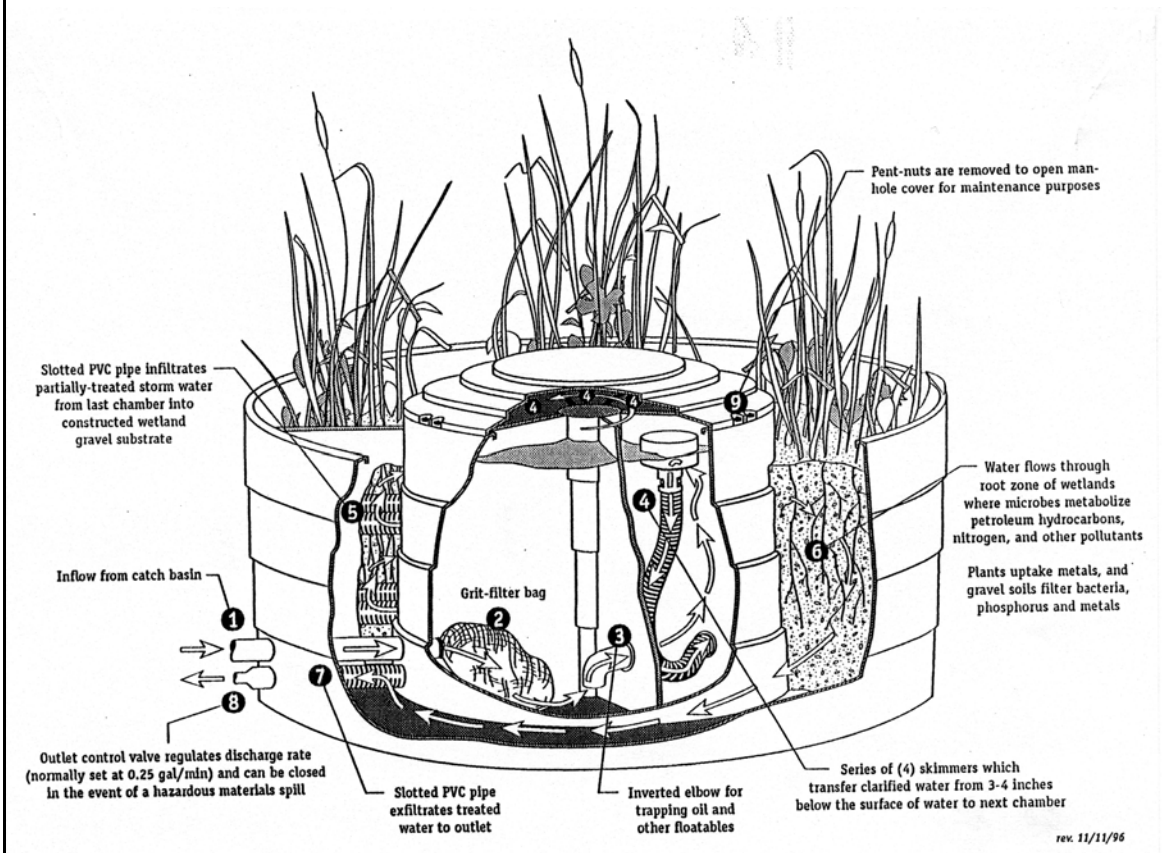

FIGURE 3.15-7
StormTreat System

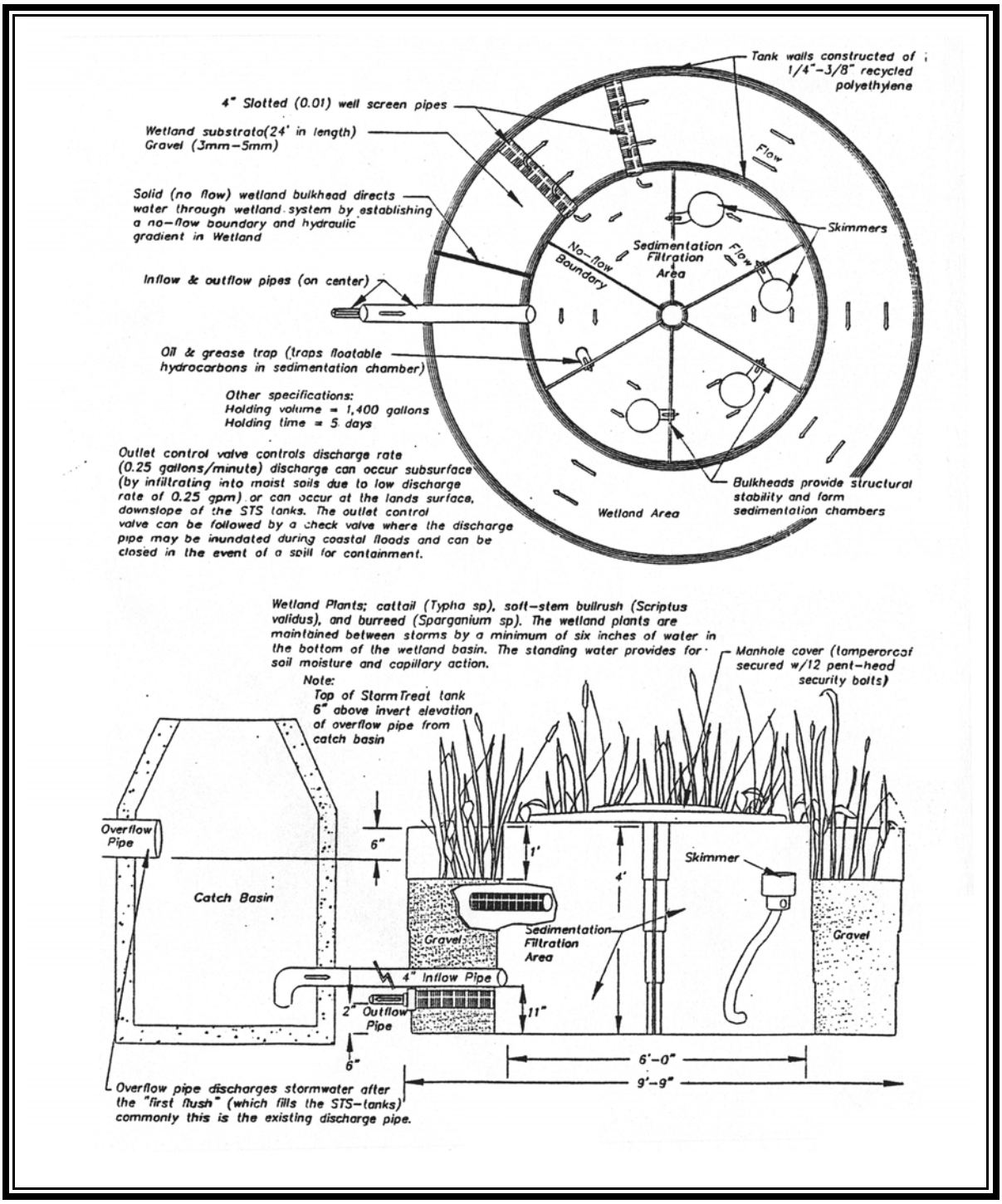

MINIMUM STANDARD 3.15E

STORMFILTER

Description

The *StormFilter* uses cylindrical rechargeable filter cartridges which hold a variety of filter media and can be customized by using different filter media to remove desired levels of sediments, phosphorus, nitrates, soluble metals, and oil & grease. Housed in standard size pre-cast or cast-in-place concrete vaults, the filter systems can be installed in-line, allowing stormwater to percolate through the cylindrical cartridges before discharging to an open channel drainage way. The *StormFilter* is equipped with scum baffles that trap floating debris and surface films, even during overflow conditions.

There are no external power requirements for the *CSF Stormwater Treatment System*. Moving parts are contained within the filter cartridges as part of the *priming system* discussed in the Hydraulics section.

Overflow – The *CSF system* is designed with an overflow that operates when the inflow rate exceeds the infiltration capacity of the filter media. The overflow consists of a weir wall inside the structure housing. Depending upon individual site characteristics, some filters are equipped with high- and/or low-flow bypasses. High-flow bypasses can be installed when the calculated peak storm event generates a flow which overcomes the overflow capacity of the filter.

Hydraulics – The hydraulics of the *StormFilter* are designed to maintain the design flow rate through the filter without pumps or other motorized devices. Each filter cartridge contains a float-actuated device called a *priming system* within the central drainage tube. This system primes the cartridges, which then develop a siphon inside the drainage tube. The siphon increases as the filter cartridges become progressively clogged to help maintain the design flow.

Planning Considerations

The *StormFilter* is a structural BMP which can be easily installed in a parking lot or in fully developed areas as it does not require additional development space. However, consideration should be given to long term maintenance costs.

Target Pollutants – The *StormFilter* is designed to capture sediment (TSS), soluble metals, and oil and grease, nitrogen, and phosphorus. The various filter media can be selected to target pollutants of primary concern. The following filter media are available:

- Pleated fabric
- CSF leaf media
- Perlite
- Zeolite
- Granular activated carbon

According to the manufacturer, a combination of the pleated fabric and the zeolite media provides the best removal efficiencies for phosphorus and TSS.

Design Criteria

The design criteria for the *CSF Stormwater Treatment System* should be obtained from the manufacturer. All designs should be reviewed by the manufacturer to insure that the system is correctly designed and sized.

Maintenance and Inspections

Maintenance requirements of the *CSF Stormwater Treatment System* are controlled by the amount of plugging of the filters caused by sediment accumulation. The filters are progressively loaded with sediment contained in runoff. At least one scheduled inspection of the filter must be undertaken to perform minor maintenance activities, which includes flow valve adjustment. The major maintenance activity is performed to rejuvenate the media and clean the system. Major maintenance activities may also be required in the event of a chemical spill or excessive sediment loading (due to site erosion or extreme storms). It is also good practice to inspect the system after severe storm events.

When the cartridges become too occluded with sediments, maintenance involves the removal of the exhausted cartridges and replacement with freshly charged cartridges. The time period between when the cartridges are initially installed and when they must be replaced is dependent upon site specific conditions and sediment loading.

As with other filtration systems, sediments will accumulate on the filter surface, eventually slowing the infiltration capacity. To reduce sediment loading to the surface of filters, it is recommended that the filters be used in conjunction with sediment reducing practices such as parking lot sweeping and

catch basin sand traps.

Contact:

Mr. James H. Lenhart, P.E.
Stormwater Management
2035 Colombia Boulevard, NE
Portland, Oregon 97211
ph. (800) 548-4667

FIGURE 3.15-8
StormFilter

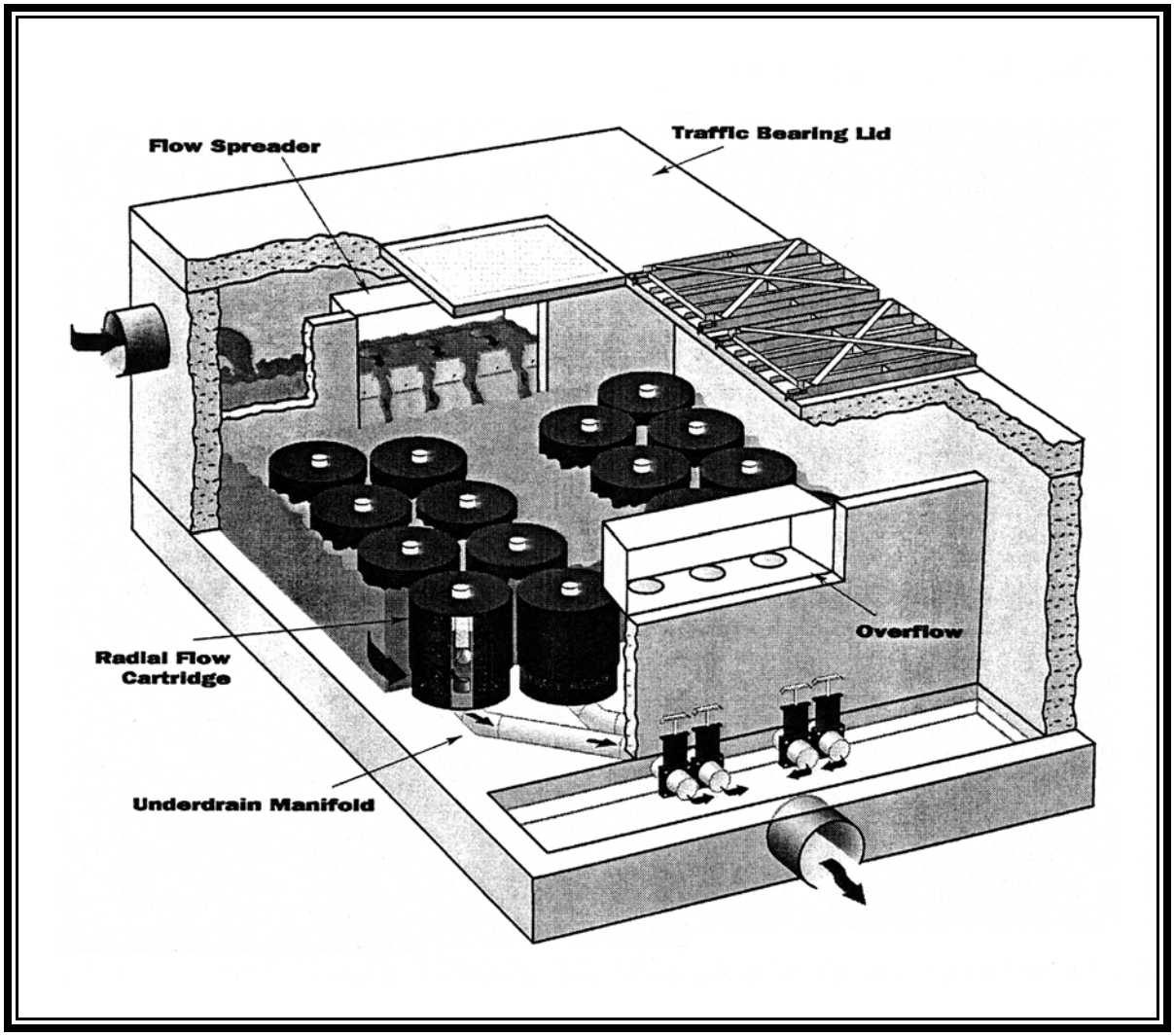

FIGURE 3.15-9
StormFilter Drop-In Filter

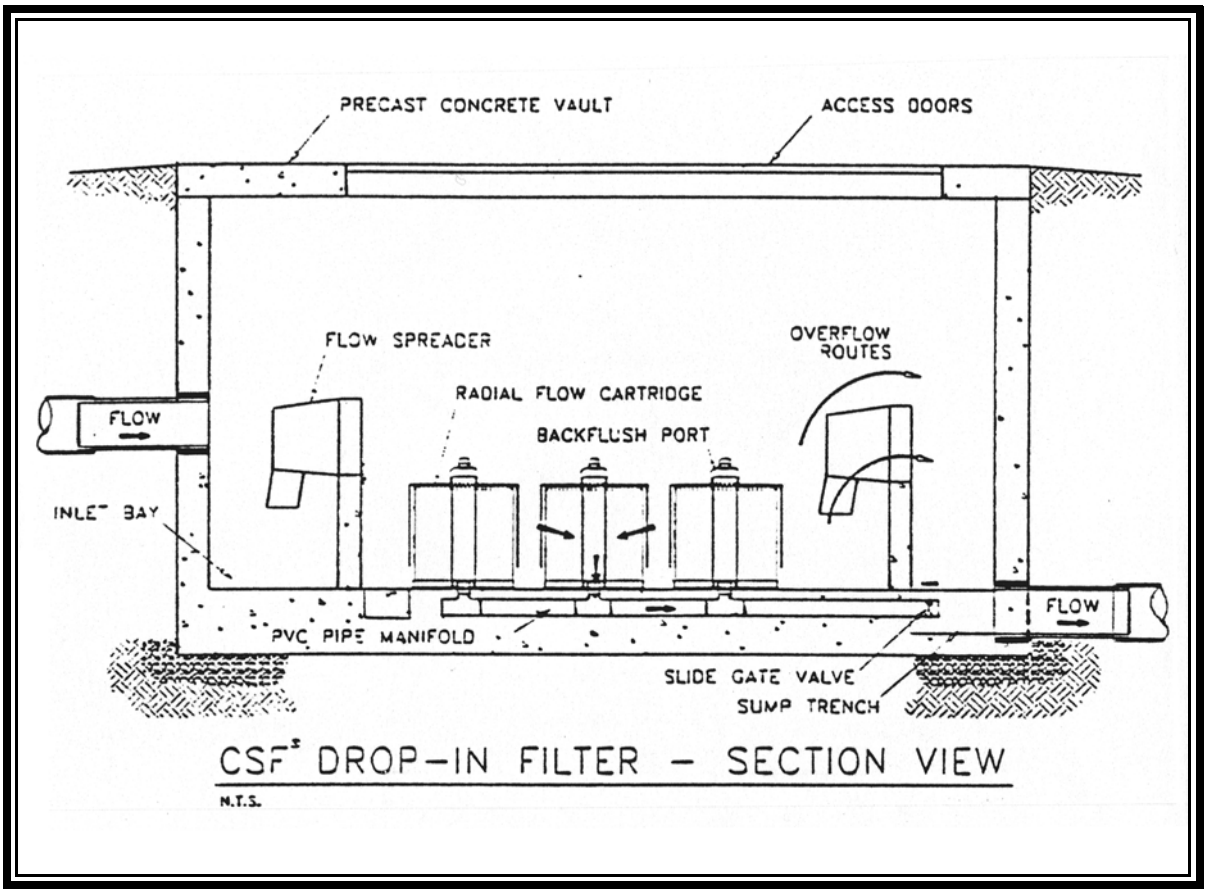

MINIMUM STANDARD 3.15F

BAYSAVER

Description

The Bay Saver system is comprised of three main components: the Primary Separation Manhole, the Secondary Storage Manhole, and the BaySaver Separator Unit. The primary and secondary manholes are both standard precast concrete drop structures. The BaySaver Separator Unit is constructed of high-density polyethylene (HDPE).

Stormwater runoff enters the BaySaver system through the primary separation manhole. As the water flows into the manhole, the larger sediments settle to the bottom of the tank. **Figure 3.15-10** shows a profile of the primary manhole. The structure has a minimum water level at the elevation of the BaySaver's surface skimming weir. This weir is a trapezoidal shaped weir with a bottom width ranging from 3" to 6", and a flow depth of 9" to 18", depending on the size unit as required by the contributing drainage area. As water flows into the manhole, the surface water flows over the weir and is diverted to the storage manhole. This water carries with it floating pollutants (oils, for example), debris, and fine sediment particles.

The BaySaver Separator Unit incorporates three flow paths that water can take through the system. The trapezoidal surface-skimming weir diverts first flush and low flows into the second manhole for the most efficient treatment. As the water level rises in the primary separation manhole, more water flows over the weir. The majority of oils and fine sediments are removed by this flow path.

During a more intense storm, the BaySaver unit will also allow water to flow through the inverted 90E elbow pipes. The elbow pipes draw water from the middle of the primary separation manhole, with the intakes approximately four feet below the surface, and discharge directly to the system outfall. The water pulled by the elbows is free of floating contaminants and has had time for suspended sediments to settle out. By discharging this water, the BaySaver can continue full treatment of the surface flow in the second manhole.

If the flow becomes too great for the system to effectively treat, the BaySaver bypasses the treatment stages, conveying water directly from inlet to outlet. Elongated openings in the crown of the elbow pipes serve as pressure equalizers, significantly reducing flow through the submerged inlets of the elbow pipes during bypass. This reduction minimizes the resuspension and discharge of trapped contaminants from the primary manhole. Bypass flows also prevent water from flushing through the storage manhole, providing more protection against the risk of resuspension of fines and oils.

There are no moving parts and no external power requirements for the BaySaver.

Overflow - Large storm bypass is accomplished first by the two 90E inverted elbow pipes, and second by overflowing the top plate over the weir (set approximately at ½ the diameter of the separator unit).

Hydraulics - The separator unit and associated overflow pipes are sized according to the drainage area being served. The system should operate without creating a back water condition in the upstream drainage system.

Planning Considerations

The BaySaver primary and secondary manholes are precast and come in three sizes depending on drainage area size. The system can be installed on an existing system (as a retro fit) or on a new system where water quality enhancement is required.

Target Pollutants - The BaySaver system is designed to capture sediment, total suspended solids (TSS) trash, organic material, and floatable oil and grease. In addition, many other urban pollutants which absorb to sediments and particles can also be trapped by the structure.

Design Criteria

The design criteria for the BaySaver should be obtained from the manufacturer. All designs should be reviewed by the manufacturer to insure that the system is appropriately designed and sized.

Maintenance and Construction

It is generally recommended that the system be maintained (full pump-out) once per year. This frequency may have to be adjusted to a shorter interval once loading rates are determined. Regular inspections will help determine the required frequency of cleaning. More frequent inspections are appropriate where oil spills occur regularly or a large volume of trash and debris are expected.

Contact:

BaySaver, Inc.
1010 Deer Hollow Drive
Mount Airy, Maryland 21771
Phone: (301) 829-6119

FIGURE 3.15-10
BaySaver Primary Separation Manhole

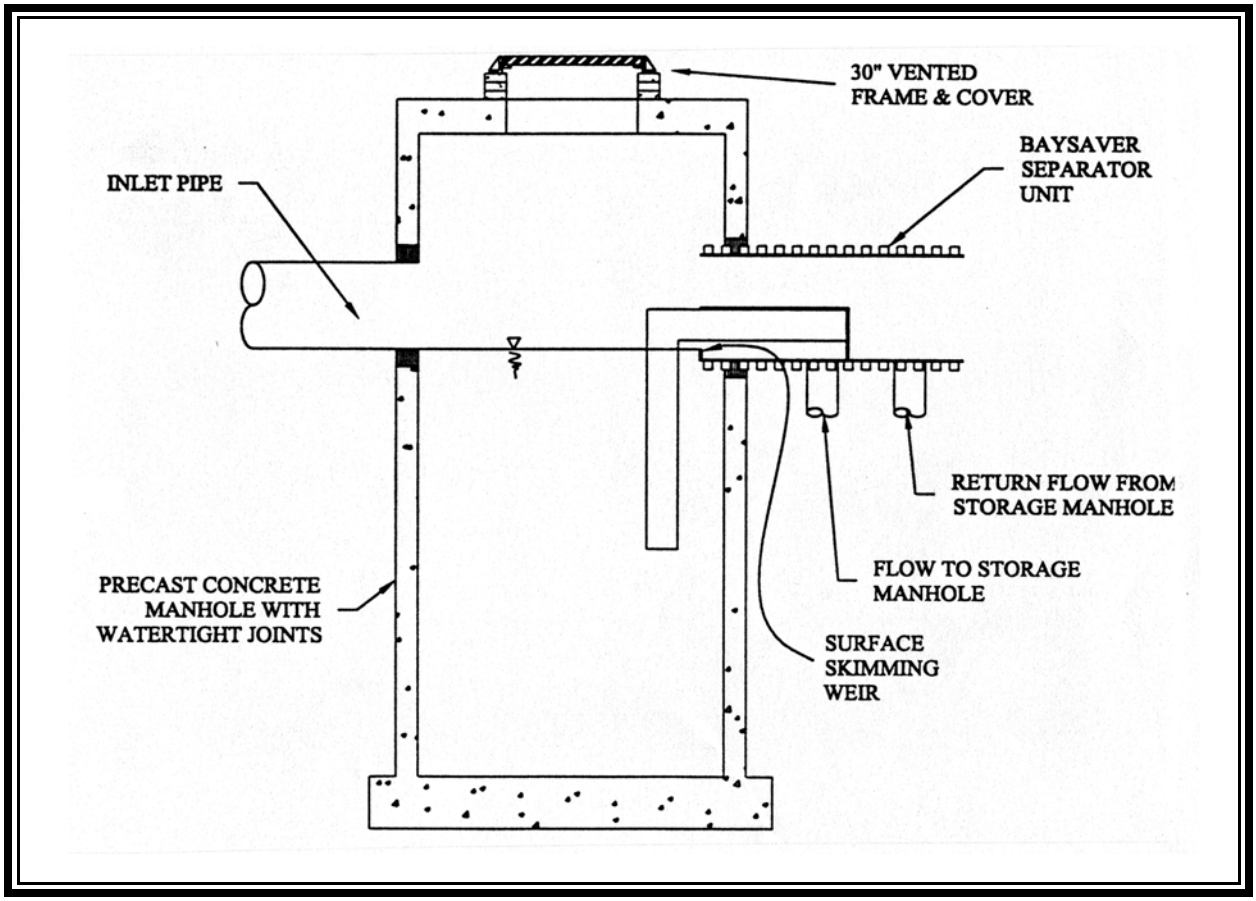

FIGURE 3.15-11
BaySaver Plan View

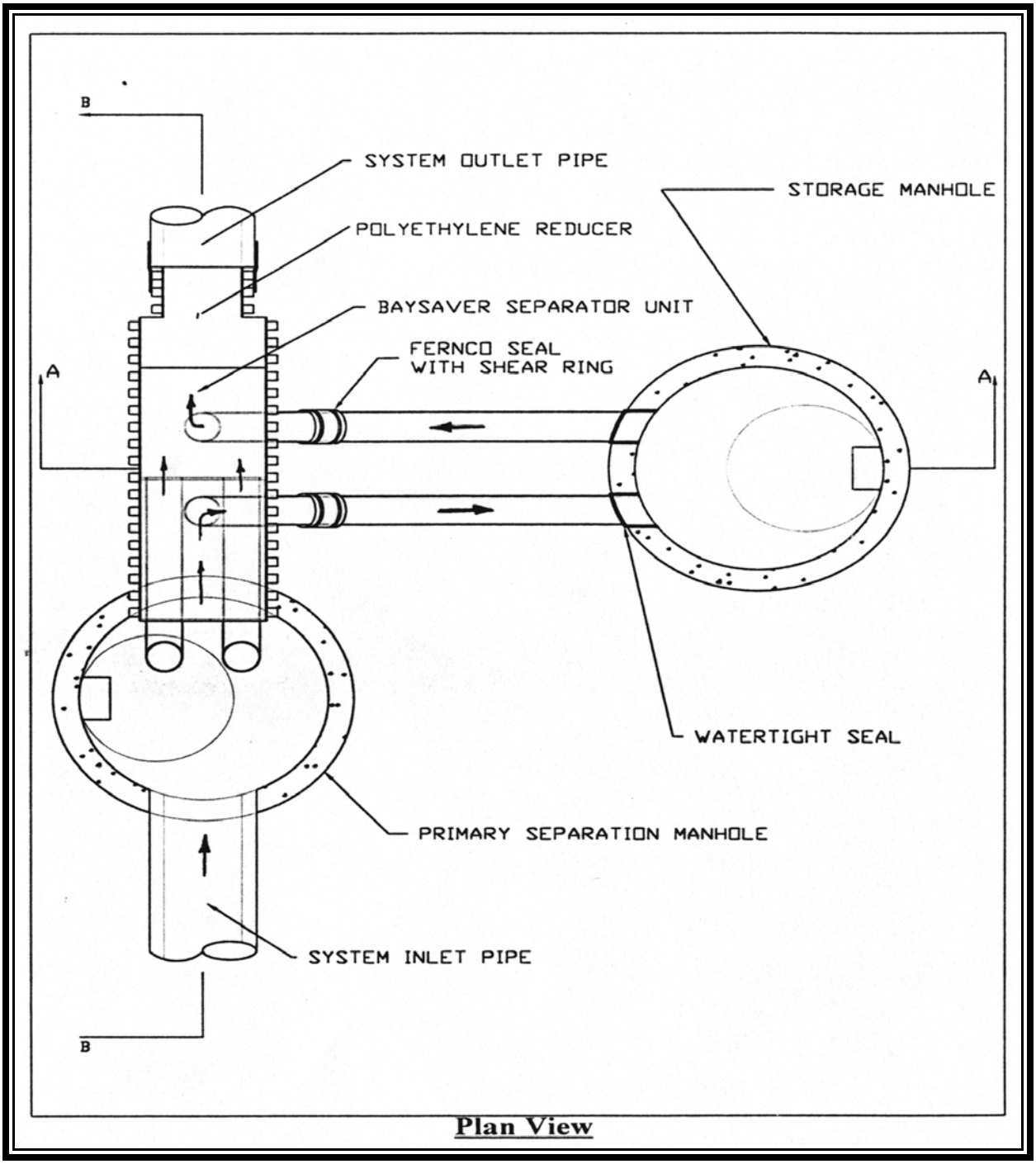

FIGURE 3.15-12
BaySaver Section A-A

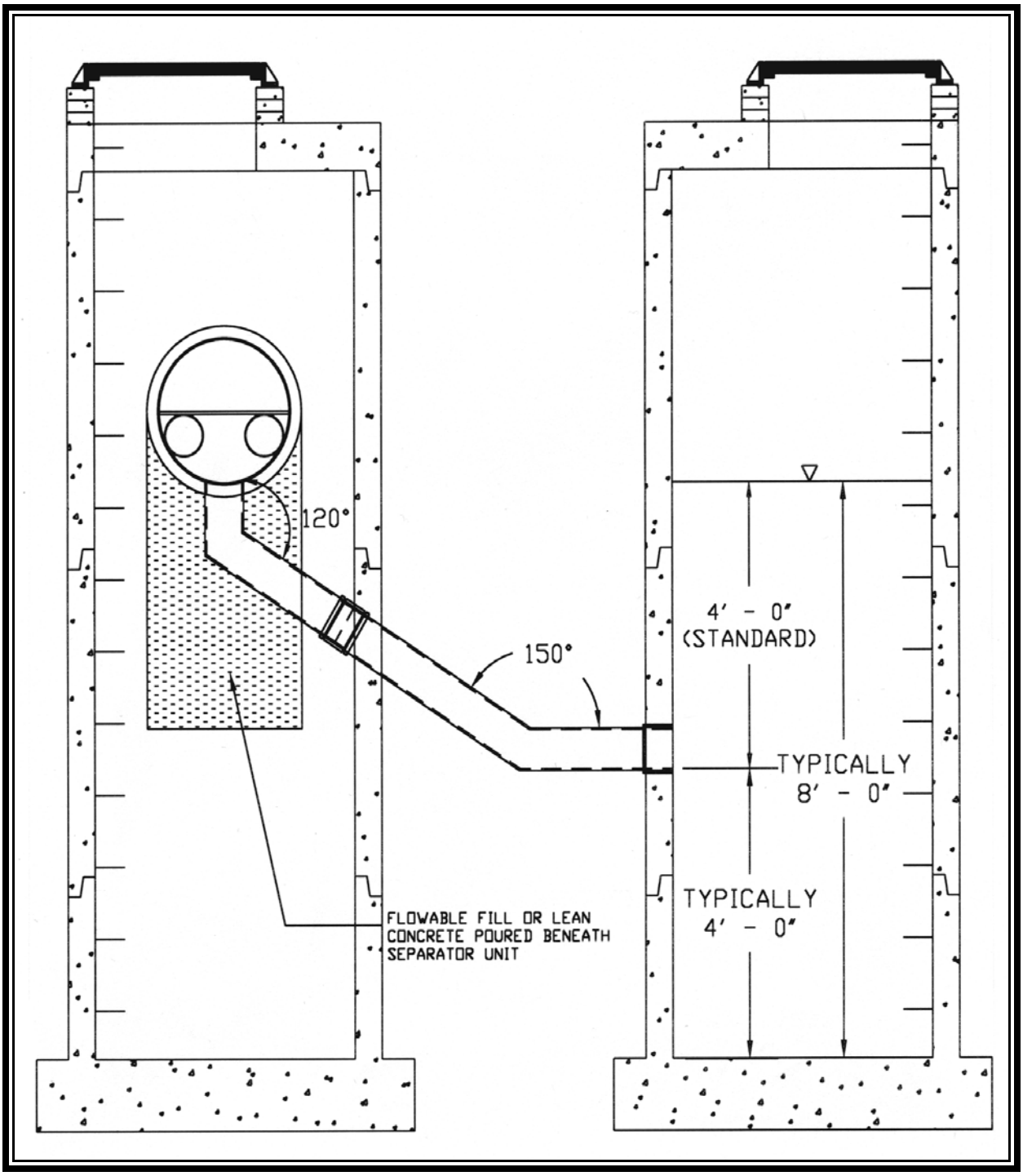

FIGURE 3.15-13
BaySaver 1K Separator Unit

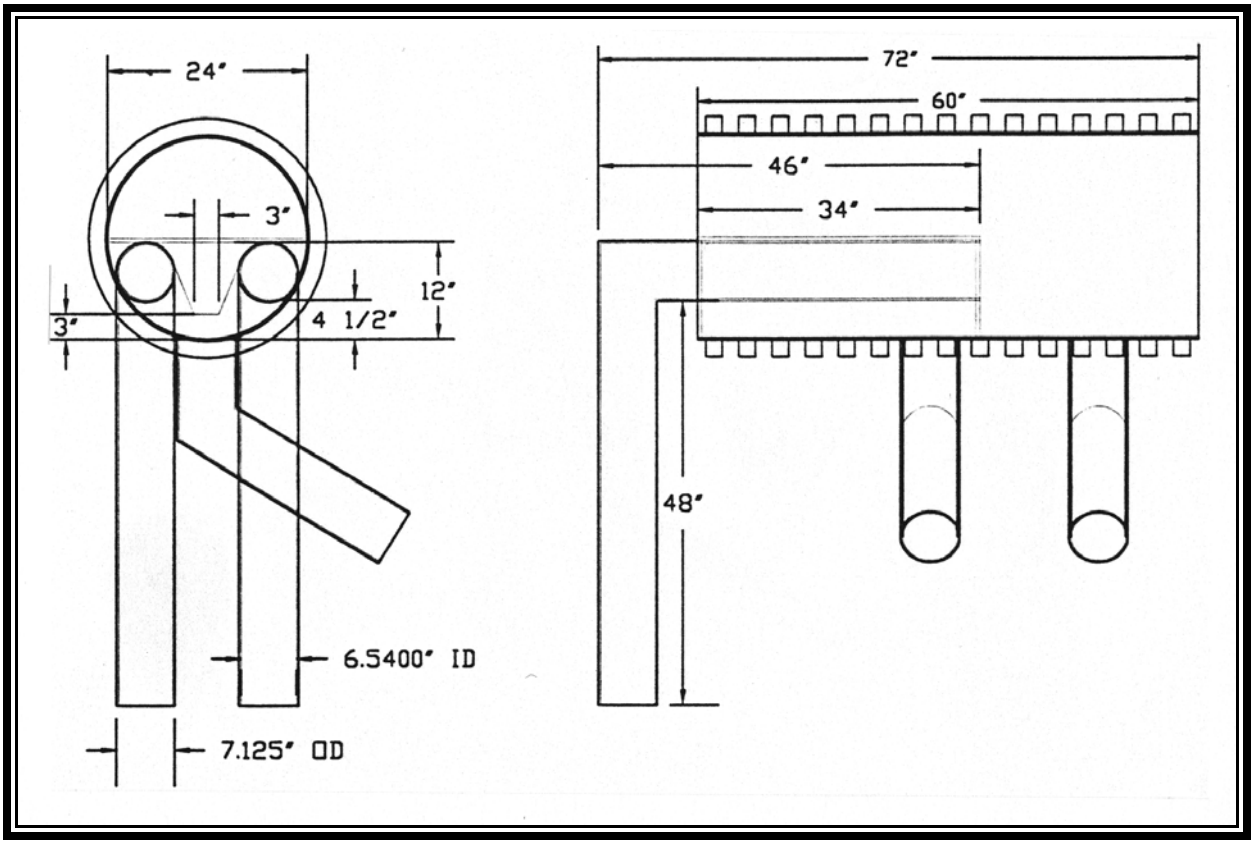

Manufactured BMP Systems. Manufactured systems can be selected to address specific pollutant sources. This trench drain surrounds fuel handling area of a service station to direct any spills or otheridentified petroleum based contaminants to a manufactured system designed specifically for fuel or hydrocarbon containment. Note: fuel area is under cover which serves to limit the design flow entering the system.

Manufactured BMP Systems

CHAPTER 3

APPENDIX

CHAPTER 3

APPENDIX

CONTENTS

APPENDIX 3A Introduction - Checklists

APPENDIX 3B Detention, Retention and Impoundment BMPs

- **Design and Plan Review Checklist**
- **Construction Inspection and As-Built Checklist**
- **Operation and Maintenance Inspection Checklist**

APPENDIX 3C Infiltration BMPs

- **Design and Plan Review Checklist**
- **Construction Inspection and As-Built Checklist**
- **Operation and Maintenance Inspection Checklist**

APPENDIX 3D Intermittent Sand Filters

- **Construction Inspection and As-Built Checklist**
- **Operation and Maintenance Inspection Checklist**

APPENDIX 3E Bioretention

- **Plant Selection and Site Consideration Checklist**
- **Construction Inspection and As-Built Checklist**
- **Operation and Maintenance Inspection Checklist**

APPENDIX 3A

Introduction - Checklists

Design and Plan Review Checklists

Design and plan review checklists provide general guidance for both the designer and plan reviewer. Many items listed on the checklists may not apply to any given design and it is therefore up to the designer to indicate items as "*not applicable*" or "*NA*" as appropriate. Similarly, the reviewer must be able to distinguish which items are required based on the local conditions or requirements and verify the status of those items. These checklists serve as a tool for providing the designer with the necessary information needed to develop an approvable plan, as well as for providing the plan review authority with a consistent review procedure.

Construction Inspections and As-Built Survey Checklists

The purpose of construction inspections and an as-built survey is to verify that constructed SWM facilities and associated conveyance systems have been built in accordance with the approved plan and design specifications. An as-built survey, including construction inspection logs should be provided prior to final site approval and release of the performance guarantee. This is in the best interest of the owner as well as the local program, since long term maintenance costs can increase significantly, if the facility is not built correctly. Also, there could be a problem that the system may not provide the quantitative and/or qualitative control, as prescribed by the approved plan. Liability issues arise if a downstream property owner is adversely affected and can prove that the facility is not per the approved plan.

A. Construction Inspections

Adequate construction inspection of stormwater BMPs will usually require an on-site inspector to verify that the materials, methods, and placement, are in accordance with the approved plans and specifications. Critical components of the design; such as the anti-seep collar or filter and drainage diaphragm on the outlet conduit, the embankment foundation, riser footing, and other sub-surface components, must be examined for compliance to the design prior to being backfilled with the earthen embankment. The use of an on-site inspector will help to avoid delays by allowing the contractor to proceed with the earthwork rather than waiting for a scheduled (or non scheduled) inspection of a critical component.

Localities will usually provide regular inspections of SWM facilities under construction. The frequency of these inspections will vary based on the workload represented by active projects and the number of inspectors on staff. These inspections should verify that the contractor and on-site inspector are documenting the construction inspections in order to adequately substantiate the as-built certification. In the case of a local program requirement of inspections during critical portions of the construction, a signed inspection log by a qualified individual (other than the contractor) should be acceptable. Otherwise, the locality should establish a construction inspection schedule with the contractor prior to construction.

All inspection logs and other related information should be incorporated into a file for each individual project.

B. As-Built Survey

Some as-built documentation must be obtained *during* the construction process, since some vital components are hidden in the final product. Therefore, construction inspections and inspection records are included in the as-built survey. For purposes of discussion, an as-built survey may be broken down into three components. These components are earthwork specifications, material specifications (other than earthwork) and a dimensions and elevations survey. The items noted within these components should be checked, and documentation be retained as needed to substantiate that the SWM BMP has been constructed in accordance with the approved plan and specifications. The following provides a discussion of the components of an as-built survey.

1. Earthwork Specifications

The acceptable completion of earthwork in the construction of a SWM facility is crucial in assuring that a facility is structurally sound. This category covers all aspects pertaining to the completion of earthwork for a facility. It is essential that specific elements of the construction inspection, as well as the pre-construction feasibility analysis of the soils, be documented. This may include compaction tests, inspections of the removal of unsuitable materials under and adjacent to the embankment foundation, construction of the cut off trench and other seepage control measures, compaction around the barrel, riser structure footing, and any other element that is hidden in the final condition. All work should be completed under supervision of a licensed geotechnical engineer. The inspection logs and test results should be included in the final as-built survey.

a. Geotechnical/Geophysical Testing

The examination of existing underlying strata indicates the composition of that strata and if that strata will support a SWM facility. For example, the presence of bedrock at the natural ground surface or in “cut” provides a plane of weakness that water may follow or exfiltrate to. This is especially critical in areas of karst. Also, the presence of organics or other unsuitable materials under the embankment and embankment footing may require additional excavation. This must be documented as having been completed.

Normally, in non-karst terrain (east of the Blue Ridge), simple geotechnical logs taken at the SWM site will provide adequate interpretative results. In karst west of the Blue Ridge, however, it is extremely useful that the testing be expanded to geophysical (seismic) evaluation. These tests

provide images of underlying strata and indicate the presence of anomalies. This is critical since limestone geology exhibits extensive caves and cavities where ponding of runoff may exacerbate collapse of underlying cavities, which ultimately results in extremely expensive repairs.

b. Fill Classification

The geotechnical portion of the approved plan should provide a listing of soil classification types that are suitable for use at the project infill. Specialized criteria may also specify the classification of impermeable soil to be used for clay liners in areas of sandy soils or karst. Fill soils containing such materials as excessive or large rock, organic material or "fatty clay" (CH) classification are not acceptable due to the inability to achieve proper compaction or because of their shrink-swell properties. Verification must also be provided that the specifications for materials to be used in the construction of drainage and filter diaphragms have been complied with.

c. Compaction

The application of "lifts" in proper thickness and density is essential in attaining a stable SWM structure. The compaction of dam embankment to a percentage at or above the percent compaction specified in the approved plan and within the optimal range of moisture content assures that there will not be adverse settlement of the embankment. Careful compaction in areas adjacent to the barrel and seepage control measures is critical to eliminate excessive "void space" along the outlet barrel where the potential for embankment failure is high. Sufficient test results should be retained to document uniform compaction of the dam embankment and density/permeability of **existing soil formation and/or soils to be** used for liners (where applicable), in accordance with the approved plan.

2. Material Specifications

Construction materials may be classified as those items other than earthwork. A large number of component items needed for the construction of SWM facilities are grouped into this category. Some of these components must be inspected during installation. Materials would include, but not be limited to, concrete, reinforcing steel, concrete pipe, metal pipe, woodwork, masonry, and any other items that are applicable to the facility and satisfy all the requirements of the local program. The following provides a general discussion of some of the components of a SWM facility:

a. Riprap and Aggregate

The size distribution (diameter of aggregate), the amount of "fines" and integrity of rock may be

factors, since aggregate sizing should be in accordance to the plan.

(1) Aggregate sizing plays a role in two distinct areas. In underground reservoir use, the size of aggregate dictates the amount of void space available for infiltration or retention/detention of runoff. In riprap use, the minimum size is critical in maintaining stability during high velocity flow, while a size in great excess of the stone specified may be as equally detrimental in regards to aesthetics and/or proper placement.

(2) The amount of fines contained within aggregate is generally a visual observation, although quarry delivery tags should bear out the specifications per VDOT specs. The percentage of fines generally is important where washed stone is to be utilized for an underground aggregate reservoir, or where the outlet protection of a facility is discharging into a stream or other sensitive area that is susceptible to turbidity.

(3) Rock integrity and shape is generally the visual observation that the aggregate used will meet specifications without long term decay. For example, sandstone does not make good riprap since it may be expected to disintegrate over time. Slate usually exhibits cleavage planes and therefore lays flat. When used for outlet protection, insufficient surface roughness of the slate may not dissipate concentrated flow energy.

b. Control Structure

There are an infinite number of design configurations for a control structure. Whatever the design, there should be project specifications for dimensions, strength and specific materials in accordance with the specifications found in Chapter 3, and any other local requirements. Appropriate documentation from the manufacturer should be retained (as applicable) to document each component. For example, pre-cast concrete risers normally arrive with as-built shop drawings that indicate specifications of the item furnished. Where components are constructed at the site, such as a cast in-place riser footing, test information and/or delivery tags from the concrete plant should be retained, while rebar reinforcement and dimensional information is documented in the construction log. Other items normally applicable to the control structure include:

(1) An outlet barrel, normally affixed to the control structure, is used to convey flow to an accepted discharge point. Items related to proper conduit installation include the procedure used in sealing joints of conduit together, the method of attachment to the control structure and the use of inlet and floor shaping (as applicable) within

the control structure.

There is also a need to inspect and document the existence, location and spacing of anti-seep collars, concrete cradle or other seepage control measures (at the outlet barrel) as specified in the approved plan. Documentation should include verification of critical dimensions, existence of reinforcement and indication of concrete mix strength. In the case of filter diaphragms, both earthwork and materials need to be **considered in installation.**

(2) Trash racks of varying design and construction are normally affixed to a control structure and in some cases inlets which "feed" the SWM facility. Visual observation (with inspection log entry) should indicate bar size, spacing grate configuration, and proper attachment to the control structure, or inlet and the application of rust resistant coating to the same where applicable.

c. Geotextiles

Synthetic fabrics are frequently specified for application beneath various components, under riprap or individually in spillways or for low flow channels. Proper selection of a manufacturer's product along with installation per the plan and/or manufactures directives is necessary to assure the performance intended. Method of installation should be observed and tag be provided from the product that verify compliance to the product specification given in the approved plan.

d. Conveyance System Components

One frequently overlooked portion of a SWM design is the components comprising the drainage system for the site. It is obvious that if the system is not built as intended by the approved plan, then the facility may not function accordingly. Critical items such as conveyance conduit diameter, slope, inlet and grate length/configuration are essential to insure that the required design storm (generated by contributory area) is adequately conveyed to the SWM facility for control and/or that non-contributory area is diverted away from SWM facilities.

3. Dimensions and Elevations Survey

The approved plan provides detailed information for specific elevations such as the inverts of the outlet conduits, control orifice and weir invert elevations, invert of emergency spillway, top of the dam, as well as pond bottom and slope of the same. Additional dimensional information exclusive of the control structure should also be provided. This could include the dimensions of the impoundment area at specific

elevations and the top width and side slope of a dam embankment. The purpose of the as-built survey is to substantiate elevations and dimensions per the plan.

G. As-Built Submittal Requirements

As-built information should be documented and submitted in three forms: 1) a copy of the applicant's inspection log book. 2) a red-line revision of the approved SWM plan sheets and 3) a certification statement from a qualified individual regarding the conformance of the as-built to the approved plan.

1. A copy of the inspection log book should be kept at the project site. The log should document all aspects of the construction of the facility (with copies of applicable test results) to insure compliance with the approved plan. Any significant inconsistencies should immediately be reported to the engineer for evaluation and possible modification.

2. Red-line revision plans should be submitted upon completion of the facility. The plans should indicate any changes to the approved plan. Items that differ from the original approved plans and computations should be shown in red on both the plans and computations as follows:

    a. A red check mark must be made beside design values where they agree with actual constructed values.

    b. For changed values "line out" the design value and enter the actual value in red.

    c. Elevations to the nearest 0.1' are sufficient.

    d. A stage-storage summary table comparing the design values and the as-built values should be provided for facilities with storage volume.

3. The project owner should have those persons responsible for the inspection and implementation of the plan submit written certification that the SWM facility(s) and conveyance system have been built in accordance to the approved plan since this will cover underground facilities as well. Survey work during stake out and construction should be documented to verify underground volumes, elevations, pipe sizes, etc.

Operation and Maintenance Inspection Checklists

Once construction is completed, the SWM BMP takes on the role for which it was intended. Periodic site inspections are essential in order to monitor the effectiveness and to anticipate the maintenance needs of

the BMP. It should be pointed out that not only the facility or BMP measure installed for stormwater control is important, but also the conveyance system to the BMP and the receiving channel immediately downstream of the BMP. The conveyance channel, curbing and/or storm sewer that convey flow to the facility or intentionally divert flows around it (as a part of the design) are all considered components and must function as intended.

The necessary frequency of inspections will vary with each facility based on the type of facility, size of the contributory drainage area, and development or land use conditions within the contributory drainage area. At a minimum, a full inspection should be performed at least once a year. Periodic inspections for trash and debris accumulation and general aesthetics should be performed after significant storm events.

The following checklists provide a guide for regular inspections of the various types of urban BMPs covered in this manual. The checklists are detailed enough for an inexperienced inspector or homeowner not familiar with the specific components of the facility. Checking the column provided under the *Investigate* heading for any given item indicates a potential problem that requires attention by a qualified individual to interpret the visual indicators for possible maintenance. The checklists should be signed, dated, and maintained at an accessible location such as with an official representative of the homeowners association, the individual or company contracted for maintenance, owner, etc.

APPENDIX 3B

Checklists - Detention, Retention, and Impoundment BMPs

Design and Plan Review Checklist

Applicant:_____ **Phone No.:**_____
Designer:_____ **Phone No.:**_____
Project Name: _____
Location:_____
Type of Facility and Identification No.:_____

Plan status:
____ approved
____ not approved

Legend:
T - Complete
Inc. - Incomplete/Incorrect
N/A - Not Applicable

I. SUPPORTING DATA

_____ Narrative describing stormwater management strategy including all assumptions made in the design.

A. Drainage Area Map

_____ Site and drainage area boundaries
_____ Off-site drainage areas
_____ Pre- and post-developed land uses with corresponding acreage
_____ Pre- and post-developed time of concentration flow paths
_____ Existing and proposed topographic features
_____ Drainage area appropriate for BMP

B. Soils Investigation

_____ Soils map with site and drainage area outlined
_____ Geotechnical report with recommendations and earthwork specifications
_____ Boring locations
  _____ Borrow area
  _____ Basin pool area
  _____ Embankment area: centerline principal spillway, emergency spillway , abutments
_____ Boring logs with Unified Soils Classifications, soil descriptions, depth to seasonal high groundwater table, depth to bedrock, etc.
_____ Compaction requirements specified
_____ Additional geophysical investigation and recommendations in Karst environment

Design and Plan Review Checklist

II. COMPUTATIONS

A. Hydrology

_____ Runoff curve number determinations: pre- and post-developed conditions, with worksheets.

_____ Time of concentration: pre- and post-developed conditions, with worksheets.

_____ Hydrograph generation: pre- and post-developed condition for appropriate design and safety storms (SCS methods or modified rational-critical storm duration method)

B. Hydraulics

_____ Specify assumptions and coefficients used.

_____ Stage-storage table and curve

_____ Riser structure and barrel

- _____ Weir/orifice control analysis for riser structure discharge openings
- _____ Weir/orifice control analysis for riser crest
- _____ Barrel: inlet/outlet control analysis
- _____ Riser/Outlet Structure flotation analysis (factor of safety = 1.25 min.).
- _____ Anti-seep collar or filter diaphragm design.
- _____ Outlet protection per VE&SCH Std.. & Spec. 3.18.
- _____ Provisions for use as a temporary sediment basin riser with clean out schedule & instructions for conversion to a permanent facility.

_____ Emergency spillway adequacy/capacity analysis with required embankment freeboard.

_____ Stage - discharge table and curve (provide equations & cite references).

_____ Storm drainage & hydraulic grade line calculations.

_____ Reservoir routing of post-development hydrographs for appropriate design storms (2-yr., 10-yr., or as required by watershed conditions) & safety storms (100-yr. or as required).

C. Downstream impacts

_____ Danger reach study.

_____ 100 year floodplain impacts.

_____ "Adequate channel" calculations for receiving channel

_____ Provide downstream hydrographs at critical study points.

_____ Storm drainage plans for site areas not draining to BMP

- _____ Safe conveyance - MS-19
- _____ Areas compensated for in water quality performance-based criteria calculations

Design and Plan Review Checklist

D. Water Quality

_____ Impervious cover tabulation

_____ Technology-based criteria: proper selection of BMP based on impervious cover

_____ Performance-based criteria: pre- and post-developed pollutant load and pollutant removal requirement calculations (provide worksheets)

_____ Water quality volume for retention basin I, II, or III permanent pool

_____ Water quality volume for ext. detention and ext. detention enhanced with drawdown calculations

_____ Proper surface area/depth allocations for permanent pool/shallow marsh/constructed wetland

_____ Constructed stormwater wetland / shallow marsh

- _____ Adequate drainage area and/or base flow
- _____ Adequate pool volume
- _____ Adequate surface area
- _____ Allocation of surface area to depth zones
- _____ Maximum ponding depth over pool surface specified

III. PLAN REQUIREMENTS

A. General Items

_____ Plan view drawn at 1"=50' or less (40', 30', etc.)

_____ North arrow

_____ Legend

_____ Location plan and vicinity map

_____ Property lines

_____ Existing & proposed contours (2' contour interval min.)

_____ Existing features & proposed improvements (including utilities and protective measures)

_____ Locations of test borings

_____ Earthwork specifications

_____ Construction sequence for SWM basin and E&S controls

_____ Temporary erosion & sediment control measures

_____ Conveyance of base flow during construction

_____ Temporary and permanent stabilization requirements

- _____ Emergency spillway
- _____ Basin side slopes

Design and Plan Review Checklist

_____ Basin bottom

_____ Delineation of FEMA 100 year floodplain

_____ Plans sealed by a qualified licensed professional

B. BMP Plan Views

_____ Dimensions of basin features: perm. Pool, sediment forebay, embankment, etc.

_____ Location of all conveyance system outfalls into basin

_____ Proper orientation to avoid short circuiting

_____ Outlet protection per VE&SCH

_____ Top of bank & basin bottom elevations

_____ Elevations of permanent pool, water quality volume and max. design water surface elevations for all appropriate design storms and safety storms

_____ Side slope (H:V) of basin storage area and embankment (upstream and downstream slopes)

_____ Proper length-to-width ratio as specified in BMP design criteria

_____ **Pervious** low flow channel

_____ Sediment forebay

_____ Basin bottom slope

_____ Maintenance access to sediment forebay, riser structure, and one side of the basin ponding area

_____ Peripheral ledge for safety

_____ Aquatic Bench

_____ Shoreline protection

_____ Safety fence

_____ Riser and barrel materials and dimensions labeled

_____ Constructed stormwater wetland / shallow marsh

_____ Basin liner specifications

_____ Pool depth zones identified on plan

_____ Pool geometry - wet/dry weather flow path

Design and Plan Review Checklist

C. BMP - Section Views & Related Details

1. Embankment (or dam) and Ponding Areas

_____ Elevations of permanent pool, water quality volume and max. design water surface elevations for all appropriate design storms and safety storms

_____ Top of dam elevations- constructed height and settled height (10% settlement).

_____ Adequate freeboard

_____ Top width labeled

_____ Elevation of crest of emergency spillway

_____ Emergency spillway w/ side slopes labeled.

_____ Emergency spillway inlet, level, and outlet sections labeled

_____ Existing ground and proposed improvements profile along center line of embankment

_____ Existing ground and proposed improvements profile along center line of principal spillway

_____ Typical grading section through pond including typical side slopes with aquatic bench, safety ledge, shoreline protection, etc.

_____ Existing ground and proposed improvements along center line of emergency spillway

_____ Dimensions of zones for zoned embankment

2. Seepage Control

_____ Impervious lining

_____ Phreatic line (4:1 slope measured from the principal spillway design high water).

a. Anti-seep Collar

_____ Anti-seep collar (detail reqd..).

_____ Size (based upon 15% increase in seepage length).

_____ Spacing & location on barrel (at least 2' from pipe joint).

b. Filter Diaphragm

_____ Design certified by a professional geotechnical engineer.

3. Foundation Cut Off Trench or Key Trench

_____ Materials labeled

_____ Bottom width (4' min. or greater per geotech. report).

_____ Side slopes labeled (1:1 max. steepness).

_____ Depth (4' min. or as specified in geotechnical report)

Design and Plan Review Checklist

4. Multi Stage Riser and Barrel System

_____ Materials labeled

_____ Bedding or cradle details provided

_____ Gauge & corrugation size for metal pipes specified

_____ Barrel diameter, inverts, and slope (%) labeled

_____ Outlet protection per VESCH, Std. & Spec. 3.18, 3.19 w/ filter cloth underlayment

_____ Crest elevation of riser structure shown

_____ Inverts and dimensions of control release orifices/weirs shown

_____ Structure dimensions shown

_____ Control orifice/weir dimensions shown

_____ Extended detention orifice protection (detail required for construction)

_____ Riser trash rack or screen (detail reqd.. for construction).

_____ Riser anti-vortex device (detail reqd.. for construction).

_____ Proper riser structure footing.

_____ Access to riser structure interior for maintenance.

_____ Basin drain pipe

D. Landscape Plan

_____ Planting schedule and specifications (transport / storage / installation / maintenance)

_____ Plant selection for planting zones 1thru 6

_____ Preservation measures for existing vegetation

_____ Top soil / planting soil included in final grading

E. Maintenance Items

_____ Person or organization responsible for maintenance.

_____ Maintenance narrative which describes the long-term maintenance requirements of the facility and all components.

_____ Facility access from public R/W or roadway.

_____ Maintenance easement.

Design and Plan Review Checklist

COMMENTS

BY: _____ DATE: _____

Construction Inspection and As-Built Survey Checklist

Applicant: _____ **Phone No.**:_____
Designer:_____ **Phone No.**:_____
Project Name:_____
Location:_____
Contractor:_____ **Phone No.**:_____
Permit No.: _____
Type of Facility and Identification No. _____

A separate checklist is to be completed for separate BMPs, should more than one be used at a given project.

* Key - (T) If acceptable

(Inc.) If not adequate, explanation at the end of a section is required

(NA) If not applicable

I. INSPECTION LOGS and TEST DOCUMENTATION

A. Earthwork

_____ The results and interpretation of geo-physical testing in areas of karst formation (west of the Blue Ridge) or geo-technical analysis (boring log data) of underlying strata elsewhere in the state

_____ Verification of removal of all unsuitable material beneath dam embankment and footing

_____ Verification of fill classification/suitability for use in the embankment

_____ Verification of proper installation of cut-off trench

_____ Verification of soil impermeability for material used in the liner, and proper liner thickness

_____ Multiple compaction test results indicating adequacy throughout the embankment section including areas adjacent to the outlet conduit and any seepage control measures.

_____ Verification that underlying bedrock and/or the water table does not interfere with the impoundment

_____ Verification of dimensions of sub surface features such as the riser structure footing, anti seep collars, filter and drainage diaphragm, etc.

B. Materials

_____ Riprap size distribution and composition

_____ Inlet shaping (within the control structure and system manholes)

_____ Trash rack construction/coatings

_____ Trash rack; method of installation

_____ Shop drawings for control structure detailing dimensions, elevations, and reinforcing information

_____ Verification of structure reinforcement and water tight connections

Construction Inspection and As-Built Survey Checklist

_____ Low-flow channel lining
_____ Outlet barrel size/construction type/length
_____ Outlet protection
_____ Anti-vortex device

(Comments)

_____
_____
_____

II. DIMENSIONS and ELEVATIONS SURVEY (Red Lined Plan Sheets)

_____ Top width, and side slopes (profile) of dam embankment
_____ Inverts and slope (%) of outlet conduit
_____ Elevation and cross section of the emergency spillway
_____ Principal spillway profile including elevations and geometry of riser control orifices and/or weirs
_____ Cast-in-place control structure dimensions/elevations
_____ Riser crest and invert of control structure
_____ Outlet protection
_____ Contours of the ponding area
_____ Slope(s) of storm sewer system conduit with inverts in and out for each pipe
_____ Slope and cross-section of all on-site channels

(Comments)

_____
_____
_____
_____

II. CERTIFICATIONS

_____ Certification's from manufacturers for materials used
_____ Seeding tickets and specifications
_____ Certification statement and seal by licensed professional indicating the as-built drawing is accurate, complete and constructed per the approved plan

Operation and Maintenance Checklist

Page 1 of 3

	YES / NO	REPAIR	INVESTIGATE	Inspector Name:_____ Inspection Date: _____ Type of BMP:_____
Item				**Comments**
I. EMBANKMENT				
A. Crest				
1. Visual settlement				
2. Misalignment				
3. Cracking				
B. Upstream slope				
1. Erosion				
2. Adequate groundcover				
3. Trees, shrubs or other				
4. Cracks, settlements or bulges				
5. Rodent holes				
C. Downstream slope				
1. Erosion				
2. Adequate groundcover				
3. Trees, shrubs or other				
4. Cracks, settlements or bulges				
5. Rodent holes				
D. Abutments				
1. Erosion				
2. Seepage				
3. Cracks				

Operation and Maintenance Checklist

Page 2 of 3

	YES / NO	REPAIR	INVESTIGATE	InspectorName:_____ Inspection Date:_____ Type of
E. Drainage, seepage control				
1. Internal drains flowing				
2. Seepage at toe				
II.EMERGENCY SPILLWAY				
1. Eroding or backcutting				
2. Obstructed				
3. Leaking				
4. Operational				
IV. PRINCIPAL SPILLWAY BARREL				
1. Seepage into conduit				
2. Debris present				
3. Displaced or offset joints				
V. OUTLET PROTECTION/ STILLING BASIN				
1. Obstructed				
2. Adequate riprap				
3. Undercutting at outlet				
4. Outlet channel scour				
VI. BASIN & UPLAND BUFFER AREA				
A. Low flow channel				
1. Erosion				
2. Adequate vegetation				
3. Obstructed				

Operation and Maintenance Checklist

	YES / NO	REPAIR	INVESTIGATE	Inspector Name:_____ Inspection Date:_____ Type of BMP: _____
B. Basin bottom & side slopes				
1. Erosion				
2. Adequate stabilization				
3. Sediment accumulation				
4. Floating debris				
5. High water marks				
6. Shoreline protection				
C. Inflow channels/pipes				
1. Erosion				
2. Adequate stabilization				
3. Undercutting				
D. Sediment forebay				
1. Sediment accumulation				
2. Stable overflow into basin				
E. Upland landscaping				
F. Aquatic landscaping				

APPENDIX 3C

Checklists - Infiltration BMPs

Design and Plan Review Checklist

Applicant:_____ **Phone No.:**_____
Designer:_____ **Phone No.:**_____
Project Name: _____
Location:_____
Type of Facility and Identification No.:_____

Plan status:
____ approved
____ not approved

Legend:
T - Complete
Inc. - Incomplete/Incorrect
N/A - Not Applicable

I. SUPPORTING DATA

_____ Narrative describing stormwater management strategy including all assumptions made in the design.
(Infiltration basin, infiltration trench, roof downsput system, porous pavement)

A. Drainage Area Map

_____ Site and drainage area boundaries
_____ Off-site drainage areas
_____ Pre- and post-developed land uses with corresponding acreage
_____ Pre- and post-developed time of concentration flow paths
_____ Existing and proposed topographic features
_____ Drainage area appropriate for BMP

B. Soils Investigation

_____ Soils map with site and drainage area outlined
_____ Geotechnical report verifying suitability for infiltration (0.52"/hr $\leq f <$ 8.27"/hr)
_____ Boring locations
_____ Boring logs with Unified Soils Classifications
- _____ Soil descriptions
- _____ Depth to seasonal high groundwater (2' to 4' below design bottom of facility, min.)
- _____ Depth to bedrock (2' to 4' below design bottom of facility, min.)
- _____ Verification of absence of karst topography

Design and Plan Review Checklist

C. Topographic Conditions

_____ Meets minimum slope requirements

_____ Porous pavement: s < 3% (20H:1V)

_____ All other infiltration facilities: s < 20% (5H:1V)

II. COMPUTATIONS

A. Hydrology

_____ Runoff curve number determinations: pre- and post-developed conditions, with worksheets.

_____ Time of concentration: pre- and post-developed conditions, with worksheets.

_____ Hydrograph generation: pre- and post-developed condition for appropriate design and safety storms (SCS methods or modified rational-critical storm duration method)

B. Hydraulics

_____ 48 hour drain time provided

_____ Specify assumptions and coefficients used.

_____ Stage-storage table and curve (void ratio of 0.4 for stane storage)

_____ Riser structure and barrel for large storm overflow or bypass

_____ Emergency spillway adequacy/capacity analysis with required embankment freeboard for infiltration basins

_____ Storm drainage & hydraulic grade line calculations.

D. Water Quality

_____ Impervious cover tabulation

_____ Technology-based criteria: proper selection of BMP based on impervious cover

_____ Performance-based criteria: pre- and post-developed pollutant load and pollutant removal requirement calculations (provide worksheets)

_____ Water quality volume for desired target phosphorus removal efficiency.

Design and Plan Review Checklist

III. PLAN REQUIREMENTS

A. General Items

_____ Plan view drawn at 1"=50' or less (40', 30', etc.)

_____ North arrow

_____ Legend

_____ Location plan and vicinity map

_____ Property lines

_____ Existing & proposed contours (2' contour interval min.)

_____ Existing features & proposed improvements (including utilities and protective measures)

_____ Locations of test borings

_____ Construction sequence

- _____ Infiltration BMP to be constructed after site work is completed and stabilization measures have been implemented
- _____ traffic control

_____ Temporary erosion & sediment control measures

_____ Temporary and permanent stabilization requirements

- _____ Infiltration basin emergency spillway
- _____ Infiltration basin side slopes

_____ Construction specifications

- _____ Infiltration basin bottom surface preparation
- _____ Infiltration trench bottom surface preparation
- _____ Infiltration trench filter fabric laydown
- _____ Infiltration trench aggregate placement

_____ Plans sealed by a qualified licensed professional

B. BMP Plan Views

_____ Dimensions of infiltration facility

_____ Location of all conveyance system outfalls into basin with pretreatment and outlet protection per VE&SCH

Design and Plan Review Checklist

_____ Infiltration basin

- _____ Top of bank & basin bottom elevations
- _____ Elevations of water quality volume and max. design water surface elevations for all appropriate design storms and safety storms
- _____ Side slope (H:V) of basin storage area and embankment (upstream and downstream slopes)
- _____ Sediment forebay
- _____ Maintenance access to sediment forebay and riser structure

_____ Safety fence

_____ Observation well

C. BMP - Section Views & Related Details

1. Infiltration Basin

_____ Elevations of water quality volume and max. design water surface elevations for all appropriate design storms and safety storms

_____ Top of dam elevations- constructed height and settled height (10% settlement).

_____ Adequate freeboard

_____ Top width labeled

_____ Elevation of crest of emergency spillway

_____ Principal/emergency spillway w/ side slopes labeled.

_____ Principal/emergency spillway inlet, level, and outlet sections labeled

_____ Existing ground and proposed improvements profile along center line of embankment

_____ Existing ground and proposed improvements profile along center line of principal spillway

_____ Typical grading section through basin

_____ Existing ground and proposed improvements along center line of emergency spillway

_____ Dimensions of zones for zoned embankment

_____ Foundation Cut Off Trench or Key Trench

- _____ Materials labeled
- _____ Bottom width (4' min. or greater per geotech. report).
- _____ Side slopes labeled (1:1 max. steepness).
- _____ Depth (4' min. or as specified in geotechnical report)

Design and Plan Review Checklist

2. Infiltration Trench

_____ Dimensions provided

_____ Backfll material specified

- _____ Stone storage: clean VDOT No. 1 Open Graded Course Aggregate or equal
- _____ Bottom sand layer: VDOT Fine Aggregate, Grading A or B

_____ Filter Fabric

_____ Observation well

3. Porous Pavement

_____ Subgrade preparation

_____ Aggregate

- _____ Filter course: clean VDOT No. 57 Open Graded Course Aggregate or equal
- _____ Reservoir course: clean VDOT No. 3 Open Graded Course Aggregate or equal
- _____ Sand layer: VDOT Fine Aggregate, Grading A or B

_____ Porous asphalt surface course

E. Maintenance Items

_____ Person or organization responsible for maintenance.

_____ Maintenance narrative which describes the long-term maintenance requirements of the facility and all components.

_____ Facility access from public R/W or roadway.

_____ Maintenance easement.

COMMENTS

_____

_____

_____

_____

_____

_____

_____

BY: _____ DATE: _____

Construction Inspection and As-Built Survey Checklist

Applicant: _____ **Phone No.**:_____
Designer:_____ **Phone No.**:_____
Project Name:_____
Location:_____
Contractor:_____ **Phone No.**:_____
Permit No.: _____
Type of Facility and Identification No. _____

A separate checklist is to be completed for each BMP, should more than one be used at a given project.

* Key - (T) If acceptable

(Inc.) If not adequate, explanation at the end of a section is required

(NA) If not applicable

I. INSPECTION LOGS and TEST DOCUMENTATION

A. Flow splitter / Overflow

_____ Overflow invert at correct elevation

_____ Inflow pipe plugged prior to full site stabilization

B. Earthwork

_____ The results and interpretation of geo-physical testing in areas of karst formation (west of the Blue Ridge) or geo-technical analysis (boring log data) of underlying strata elsewhere in the state

- _____ Infiltration rate of soils
- _____ Depth to seasonal watertable
- _____ Depth to bedrock

_____ Verification of removal of all unsuitable material beneath dam embankment and footing

_____ Verification of fill classification/suitability for use in the embankment

_____ Verification of proper installation of cut-off trench

_____ Multiple compaction test results indicating adequacy throughout the embankment section including areas adjacent to the outlet conduit and any seepage control measures.

_____ Verification that underlying bedrock and/or the water table does not interfere with the impoundment

_____ Verification of dimensions of sub surface features such as the riser structure footing, anti seep collars, filter and drainage diaphragm, etc.

B. Materials

_____ Stone aggregate size, composition, and placement

_____ Filter fabric placement

Construction Inspection and As-Built Survey Checklist

C. Sequence of Construction

_____ Site stabilization prior to facility construction

_____ Traffic control

(Comments)

_____

_____

_____

II. DIMENSIONS and ELEVATIONS SURVEY (Red Lined Plan Sheets)

_____ Invert and diameter/geometry of flow splitter, overflow pipes, and channels

_____ Top width, and side slopes (profile) of dam embankment

_____ Dimensions of storage area

_____ Elevation and cross section of the emergency / principal spillway

_____ Outlet protection

_____ Contours of the ponding area

_____ Slope and cross-section of all on-site channels

(Comments)

_____

_____

_____

_____

II. **CERTIFICATIONS**

_____ Certification's from manufacturers for materials used

_____ Seeding tickets and specifications

_____ Certification statement and seal by licensed professional indicating the as-built drawing is accurate, complete and constructed per the approved plan

Operation and Maintenance Checklist

Page 1 of 2

Date_____

Project_____ **Site Plan / SUP Number** _____
Location_____ **Date Placed in Service** _____
Date of Last Inspection _____ **Inspector** _____
Owner/Owner's Representative _____
"As Built" Plans available: Y / N

	Satisfactory	Unsatisfactory
1. Debris cleanout		
Contributing areas clean of debris	_____	_____
Filtration facility clean of debris	_____	_____
Inlets and outlets clear of debris	_____	_____
2. Vegetation		
Contributing drainage area stabilized	_____	_____
No evidence of erosion	_____	_____
Area mowed and clippings removed	_____	_____
3. Clogging		
No evidence of surface clogging	_____	_____
Observation well clear of water within 48 hrs of storm event	_____	_____
4. Structural components		
No evidence of structural deterioration	_____	_____
Any grates are in good condition	_____	_____
No evidence of spalling or cracking of structural parts	_____	_____

Operation and Maintenance Checklist

Page 2 of 2

Site Plan/SUP Number _____ **Date:** _____

	Satisfactory	Unsatisfactory
6. Outlets/overflow spillway		
Good condition, no need for repair	_____	_____
No evidence of erosion (if draining into a natural channel)	_____	_____
8. Overall function of facility		
No evidence of flow bypassing facility	_____	_____
No standing water	_____	_____

Action to be taken:

If any of the answers to the above items are checked unsatisfactory, a time frame shall be established for their correction or repair.

No action necessary. Continue routine inspections_____

Correct noted facility deficiencies by_____

Facility repairs were indicated and completed. Site reinspection is necessary to verify corrections or repairs.

Site reinspection accomplished on_____

Site reinspection was satisfactory. Next routine inspection is scheduled for approximately:_____

_____

Signature of inspector

APPENDIX 3D

Checklists - Intermittent Sand Filters

Construction Inspection and As-Built Survey Checklist

Date_____

Project_____ **Site Plan / SUP Number** _____

Location_____ **Date BMP Placed in Service** _____

Individual(s) Conducting the Inspection_____
"As Built" Plans available Y / N

Warning: If filtration facility has a watertight cover; be careful regarding the possibility of flammable gases within the facility. Care should be taken lighting a match or smoking while inspecting facilities that are not vented. If filtration facility is in a completely enclosed vault, OSHA Confined Space Entry procedures must be followed.

	Satisfactory	Observed and Confirmed by (Initial)
1. Flow Splitter		
Overflow invert at correct elevation	_____	_____
Inflow pipe to filter plugged with watertight seal prior to site stabilization	_____	_____
2. Filter Shell (Note: Separate structural inspections of the filter shell must be conducted and documented during construction)		
Specified number and type of manhole covers and hatches installed	_____	_____
No evidence of structural defects (“honeycombing”, etc)	_____	_____
Access ladders installed as specified	_____	_____
Shell completely cleaned of construction debris, dirt, etc.	_____	_____
Dewatering drain meets specs and holds water	_____	_____
Dewatering drain penetration sealed with specified water stop	_____	_____
3. Watertight Integrity Test of Filter Shell		
Watertight plug installed in outflow pipe	_____	_____
Elevation of shell bottom observed at _____ ft.	_____	_____
Filled with water to bottom of top slab at _____(Time/date)	_____	_____
Top of water elevation observed at _____ ft.	_____	_____
Observed 24-hour drawdown at _____ (Time/date)	_____	_____
Top of water elevation after drawdown observed at _____ ft.	_____	_____
Footprint of wetted shell (from drawings) is _____ $ft.^2$		
Volume of water lost (footprint x elevation drop) = _____ $ft.^3$		
Volume of initial water (footprint x depth of water) = _____ $ft..^3$		
Percent of initial volume lost = _____ %	_____	_____

Note: If shell had $\leq$ five % water loss, the shell is satisfactory. If the shell had > five % water loss, find and seal leaks and retest until five % limit is achieved.

Construction Inspection and As-Built Survey Checklist

Site Plan/SUP Number _____ Date: _____

	Satisfactory	Observed and Confirmed by (Initial)
4. Basin(s) and Basin Liner(s) (Where Applicable)		
Basin(s) graded in conformance with plan	_____	_____
Basin liner material(s) conforms to specifications (attach 6" x 6" sample)	_____	_____
Basin liner installation(s) conforms to plans & specifications	_____	_____
5. Collector System		
Collector pipes meet specs and hole patterns are correct	_____	_____
Collector pipes wrapped in geotextile meeting specs (attach labeled 6" x 6" sample)	_____	_____
Specified galvanized hardware cloth installed over weepholes (if used)	_____	_____
Collector gravel meets specs and is installed to design depth	_____	_____
Pea gravel (if used) meets spec and is installed to design depth	_____	_____
Geotextile fabric beneath sand meets spec (attach labeled 6" x 6" sample) and is lapped at least 6" up all 4 sides	_____	_____
6. Filter Components		
Filter sand meets specifications (attach lab report showing gradation, effective size and uniformity coefficient)	_____	_____
Filter sand installed to design depth, hydraulically compacted on _____ (Date) , and refilled to design depth	_____	_____
Filter top geotextile (if used) meets spec (attach labeled 6" x 6" sample) and is lapped up all four sides	_____	_____
Filter top ballast(if used) meets specs and is installed to design depth	_____	_____
7. Clearwell		
Clearwell is free of construction debris and dirt	_____	_____
Outflow pipe invert is at the design elevation	_____	_____
Pump (where applicable) meets specs (attach catalog cuts)	_____	_____
Wiring (where applicable) is in waterproof conduits **(Note:** electrical wiring requires separate building code inspection)	_____	_____
Panel box (where applicable) is well marked (attach wiring diagram)	_____	_____
8. Upflow Gravel Prefilter (where used)		
Bottom grate meets spec and installed at design elevation	_____	_____
Bottom geometries (if used) meets spec and properly installed	_____	_____
Large bottom stone meets spec and installed to design depth	_____	_____
Pea gravel meets spec and installed to design depth	_____	_____

Construction Inspection and As-Built Survey Checklist

Site Plan/SUP Number _____ Date: _____

	Satisfactory	Observed and Confirmed by (Initial)
9. Monitoring Manholes (where required)		
Manhole shells and covers conform to specs	_____	_____
Inflow and outflow pipe slopes are as specified	_____	_____
Straight pipe runs through manholes are as specified (no bends)	_____	_____
Manholes and pipes are flushed clean	_____	_____

Note: If any of the answers under items 1 - 9 above are checked unsatisfactory, a time frame shall be established for their correction or and a reinspection shall be scheduled. A new form shall be completely filled out at the time of the reinspection. Only the form documenting completely satisfactory performance shall be submitted to the governing jurisdiction for certification. All persons initialing this form shall complete the table below:

Initial	Full Name	Signature	Title/Position and Organization

CERTIFICATION: Based on the above, I certify that the Best Management Practice covered by this report is constructed in accordance with the approved Final Site Plan and as designed.

_____
(Signature)

_____
(Typed Name and Title)
(Place professional seal on certification)

Operation and Maintenance Checklist

Date_____

Project_____ **Site Plan / SUP Number** _____
Location_____ **Date Placed in Service:** _____

Date of Last Inspection _____ **Inspector** _____
Owner/Owner's Representative _____
"As Built" Plans available: Y / N **Sand Filter Type:** _____

Warning: If filtration facility has a watertight cover; be careful regarding the possibility of flammable gases within the facility. Care should be taken lighting a match or smoking while inspecting facilities that are not vented. If filtration facility is in a completely enclosed vault, OSHA Confined Space Entry Procedures must be followed.

	Satisfactory	Unsatisfactory
1. Debris cleanout		
Contributing areas clean of debris	_____	_____
Filtration facility clean of debris	_____	_____
Inlets and outlets clear of debris	_____	_____
2. Vegetation		
Contributing drainage area stabilized	_____	_____
No evidence of erosion	_____	_____
Area mowed and clippings removed	_____	_____
3. Oil and grease		
No evidence of filter surface clogging	_____	_____
Activities in drainage area minimize oil & grease entry	_____	_____
4. Water retention where required		
Water holding chambers at normal pool	_____	_____
No evidence of leakage	_____	_____
5. Sediment deposition		
Filtration chamber clean of sediments	_____	_____
Water chambers not more than ½ full of sediments	_____	_____

Operation and Maintenance Checklist

Site Plan/SUP Number _____ **Date:** _____

	Satisfactory	Unsatisfactory
6. Structural components		
No evidence of structural deterioration	_____	_____
Any grates are in good condition	_____	_____
No evidence of spalling or cracking of structural parts	_____	_____
7. Outlets/overflow spillway		
Good condition, no need for repair	_____	_____
No evidence of erosion (if draining into a natural channel)	_____	_____
8. Overall function of facility		
No evidence of flow bypassing facility	_____	_____
No noticeable odors outside of facility	_____	_____
9. Pump (Where Applicable)		
Catalog cuts and wiring diagram for pump available	_____	_____
Waterproof conduits for wiring appear to be intact	_____	_____
Panel box is well marked	_____	_____
No evidence of pump failure (excess water in pump well, etc.)	_____	_____

Action to be taken:

If any of the answers to the above items are checked unsatisfactory, a time frame shall be established for their correction or repair.

No action necessary. Continue routine inspections_____
Correct noted facility deficiencies by_____

Facility repairs were indicated and completed. Site reinspection is necessary to verify corrections or repairs.

Site reinspection accomplished on_____

Site reinspection was satisfactory. Next routine inspection is scheduled for approximately:_____

_____
Signature of inspector

APPENDIX 3E

Checklists - Bioretention

Plant Selection and Site Consideration Checklist

Date_____

I. General Site Information

Site Plan / SUP Number _____

Project Name_____

Size of development_____

Drainage area size_____

II. Plant Material Layout Considerations

A. Site Design Considerations

Importance of aesthetics_____
_____

Important visual characteristics (foliage, form, etc.)_____
_____

Visibility and traffic considerations_____
_____

Other safety issues_____

Conflict with any structural components of site (proposed powerlines, pipes)_____
_____

General comments_____
_____

Plant Selection and Site Consideration Checklist

Site Plan/SUP Number _____ Date:_____

B. Ecological Factors

Insect and disease infestation on or near site_____
_____

Wind exposure_____

Sun exposure_____

Effects upon bioretention area from adjacent plant communities_____
_____

Wildlife benefits be included in plant material layout_____
_____

Construction Inspection and As-Built Checklist

Page 1 of 2

Date_____

Project_____ **Site Plan / SUP Number** _____
Location_____ **Date BMP Placed in Service** _____

Individual(s) Conducting the Inspection_____
"As Built" Plans available: Y / N

Warning: If any bioretention facility component has a watertight cover; be careful regarding the possibility of flammable gases within the facility. Care should be taken lighting a match or smoking while inspecting facilities that are not vented.

	Satisfactory	Observed and Confirmed by (Initial)
1. Flow Splitter or Overflow Drain		
Overflow Invert at correct elevation	_____	_____
Inflow pipe to filter plugged with watertight seal prior to site stabilization (where applicable)	_____	_____
2. Basin(s) and Basin Liner(s) (Where Applicable - Bioretention Filters)		
Basin(s) graded in conformance with plan	_____	_____
Basin liner material(s) conforms to specifications (attach 6" x 6" sample)	_____	_____
Basin liner installation(s) conforms to plans & specifications	_____	_____
3. Collector System(Where Applicable--Bioretention-Filters and Green Alleys)		
Collector pipes meet specs and hole patterns are correct	_____	_____
Collector pipes wrapped in geotextile meeting specs (attach 6" x 6" sample)	_____	_____
Specified galvanized hardware cloth installed over weepholes	_____	_____
Collector gravel meets specs and is installed to design depth	_____	_____
Pea gravel beneath sand meets spec and is installed to design depth	_____	_____
4. Sand and Planting Soil Components		
Filter sand meets specifications (attach lab report showing gradation, effective size and uniformity coefficient)	_____	_____
Filter sand installed to design depth	_____	_____
Planting soil meets design specifications	_____	_____
Planting soil installed to design depth, hydraulically compacted on _____ (Date) , and refilled to design depth	_____	_____

Construction Inspection and As-Built Checklist

	Satisfactory	Observed and Confirmed by (Initial)
5. Bioretention Plant Materials		
Plants meet size and variety specifications	_____	_____
All plants installed per landscape plan	_____	_____
Mulch or cover crop installed according to plans and specifications	_____	_____
6. Clearwell Manhole (Where Applicable--Bioretention Filters and Some Green Alleys)		
Clearwell is free of construction debris and dirt	_____	_____
Outflow pipe invert is at the design elevation	_____	_____
Outflow pipe is capped with orifice drilled to design size	_____	_____
7. Monitoring Manholes (where required)		
Manhole shells and covers conform to specs	_____	_____
Inflow and outflow pipe slopes are as specified	_____	_____
Straight pipe runs through manholes are as specified (no bends)	_____	_____
Manholes and pipes are flushed clean	_____	_____

Note: If any of the answers under items 1 - 9 above are checked unsatisfactory, a time frame shall be established for their correction or and a reinspection shall be scheduled. A new form shall be completely filled out at the time of the reinspection. Only the form documenting completely satisfactory performance shall be submitted to the governing jurisdiction for certification. All persons initialing this form shall complete the table below:

Initial	Full Name	Signature	Title/Position and Organization

CERTIFICATION: Based on the above, I certify that the Best Management Practice covered by this report is constructed in accordance with the approved Final Site Plan and as designed.

_____
(Signature)

_____
(Typed Name and Title)
(Place professional seal on certification)

Operation and Maintenance Inspection Checklist

Page 1 of 2

Date_____ **Time**_____

Project_____ **Site Plan / SUP Number** _____

Location_____

Date Placed in Service: _____ **Date of Last Inspection:** _____

Individual Conducting the Inspection _____

(Owner) _____

"As Built" Plans available: Y / N
Bioretention Facility Type: ____ Infiltration; _____ Filter; _____Green Alley

Warning: If filtration facility has a watertight cover; be careful regarding the possibility of flammable gases within the facility. Care should be taken lighting a match or smoking while inspecting facilities that are not vented. If filtration facility is in a completely enclosed vault, OSHA Confined Space Entry Procedures must be followed.

	Satisfactory	Unsatisfactory
1. Debris cleanout		
Contributing areas clean of debris	_____	_____
Bioretention facility clean of debris	_____	_____
Inlets and outlets clear of debris	_____	_____
2. Drainage Area Stabilization		
Contributing drainage area stabilized	_____	_____
No evidence of erosion	_____	_____
Area mowed and clippings removed	_____	_____
3. Oil and grease		
No evidence of filter surface clogging	_____	_____
Activities in drainage area minimize oil & grease entry	_____	_____
4. Overflow Structure		
Overflow grate/throat clear of debris	_____	_____
Any grates are in good condition	_____	_____
No evidence of erosion (if draining into a natural channel)	_____	_____

Operation and Maintenance Inspection Checklist

Site Plan/SUP Number _____ **Date:** _____

	Satisfactory	Unsatisfactory
5. Bioretention Planting Soil		
No evidence of planting soil erosion	_____	_____
Bioretention basin clean of sediments	_____	_____
6. Organic Layer		
Mulch covers entire area (NO voids) and to specified thickness	_____	_____
Mulch is in good condition	_____	_____
7. Plants		
Specified number and types of plants still in place	_____	_____
No dead or diseased plants	_____	_____
No evidence of plant stress from inadequate watering	_____	_____
No evidence of deficient stakes or wires	_____	_____

NOTE: Diseased plants must be treated by a qualified professional. Deficient stakes or wires must be replaced. Dead plants or plants diseased beyond treatment must be replaced by plants meeting original design specifications. New plants must be watered every day for the first 14 days after planting. Reinspections must be scheduled to occur following this period.

Action to be taken:

If any of the answers to the above items are checked unsatisfactory, a time frame shall be established for their correction or repair.

No action necessary. Continue routine inspections_____
Correct noted facility deficiencies by_____

Facility repairs were indicated and completed. Site reinspection is necessary to verify corrections or repairs.

Site reinspection accomplished on_____

Site reinspection was satisfactory. Next routine inspection is scheduled for approximately:_____

_____
Signature of inspector